Installation, Operation and Maintenance Instructions EN

TFSR Roof fan AC/EC
TFSK Roof fan AC/EC
TOE Roof fan AC
TOV Roof fan AC
TFE Roof fan AC

Table of contents

1 Introduction 1
1.1 Product description 1
1.2 Intended use 1
1.3 Document description 1
1.4 Product overview 1
1.4.1 Product overview for TFSR fans 1
1.4.2 Product overview for TFSK fans 2
1.4.3 Product overview for TOE fans and TOV fans 3
1.4.4 Product overview for TFE fans 4
1.5 Name plate 4
1.5.1 Type designation 5
1.6 Product liability 5
2 Safety 5
2.1 Safety definitions 5
2.2 Safety instructions 6
2.3 Personal protective equipment 6
3 Transportation and storage 6
4 Installation 7
4.1 To do before installation 7
4.2 To install the product 7
4.2.1 To install the TFSR fan 7
4.2.2 To install TFSK, TOE, TOV and TFE fans 7
5 Electrical connection 8
5.1 To do before the electrical connection 8
5.2 To connect the product to the power supply 8
5.3 Speed controller for AC motors 8
5.4 To install motor protection for AC motors 8
5.5 Speed controller for EC motors 9
5.6 Motor protection for EC motors 9
6 Commissioning 9
6.1 To do before the commissioning 9
6.2 To do the commissioning 9
7 Operation 10
7.1 To start a product with an AC motor 10
7.2 To start a product with an EC motor 10
7.3 To stop the product 10
7.3.1 To stop the product in an emergency 10
8 Maintenance 11
8.1 Maintenance schedule 11
8.2 To clean the product 11
8.3 Spare parts 11
9 Troubleshooting 12
10 Disposal 14
10.1 To disassemble and discard the parts of the product 14
11 Warranty 14
12 Technical data 15
12.1 Technical data overview 15
12.2 Product dimensions 15
12.2.1 Product dimensions for TFSR fans 15
12.2.2 Product dimensions for TFSK fans 16
12.2.3 Product dimensions for TOE fans and TOV fans 17
12.2.4 Product dimensions for TFE fans 17
12.3 Wiring diagrams 18
12.3.1 Wiring diagrams for AC fans 18
12.3.2 Wiring diagrams for EC fans 19
12.3.3 Wiring diagrams for speed controller for AC motors 19
12.3.4 Wiring diagrams for speed controllers for EC motors 23
12.3.5 Wiring diagrams for ON/OFF controls for EC motors 25
12.3.6 Wiring diagrams for demand control for EC motors 25
13 Accessory overview 27
13.1 Accessory overview for TFSR fans 27
13.2 Accessory overview for TFSK, TOE, TOV and TFE fans 28
14 EU Declaration of Conformity 29
15 UK Declaration of Conformity 30

1 Introduction

1.1 Product description

The product is a roof fan with an EC motor or an AC motor, and a tilting mechanism for easy maintenance.

The TFSK fans, TOE fans, TOV fans, and TFE fans are supplied with a square base plate.

The TFSR fans are supplied with a circular base plate.

The EC fans have an internal potentiometer for speed control during continuous operation. The internal potentiometer is installed on the terminal block from the factory.

The product is not supplied with an external speed control or installation equipment, these parts are available and recommended as accessories.

1.2 Intended use

The product is used for transportation of clean or contaminated air. Refer to www.systemair.com for the maximum temperature of transported air for the applicable motor type.

The product is intended to be used for airflow of small areas, for example apartments, storages and offices.

The product is not applicable for transportation of air that contains explosive, flammable or aggressive media. The product is not applicable for locations where there is a risk of explosion.

1.3 Document description

This document contains instructions for installation, operation and maintenance of the product. The procedures must be done by approved personnel only.

Speak to Systemair for more information on how to install the product in different installation locations.

1.4 Product overview

1.4.1 Product overview for TFSR fans

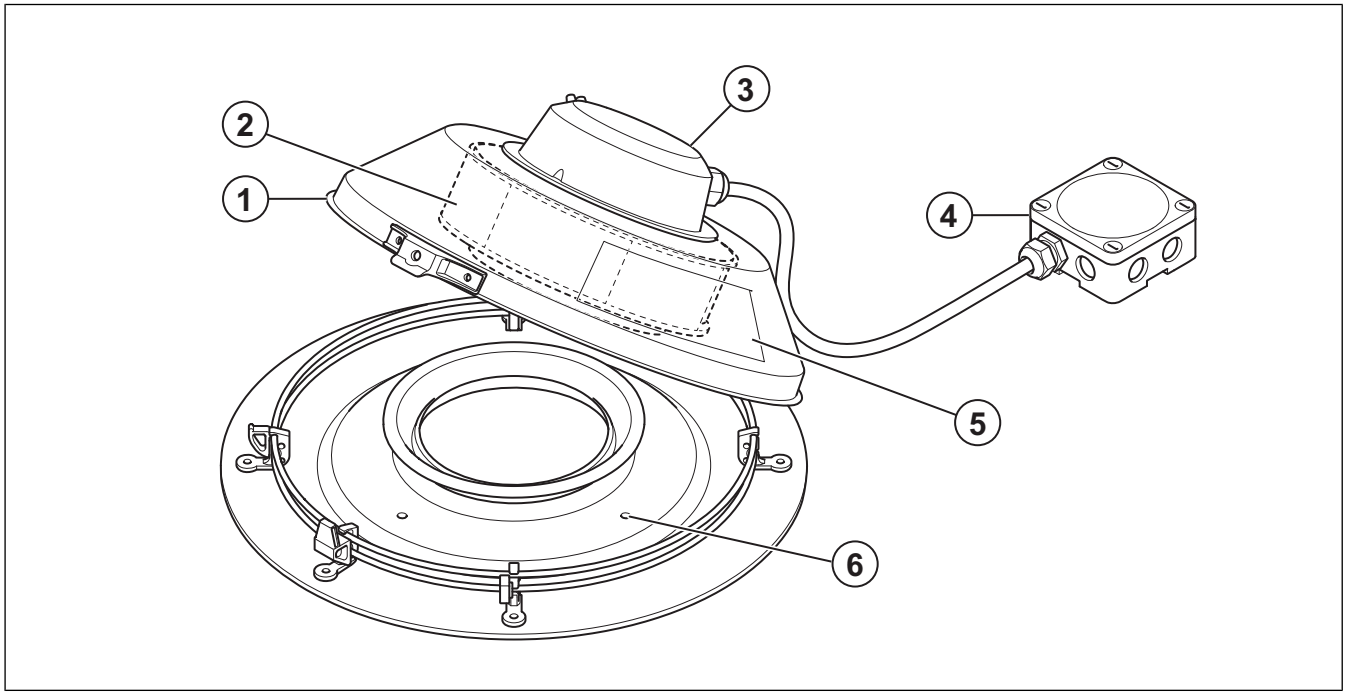

1. Service lid
2. Fan impeller
3. Motor
4. Connection box
5. Name plate
6. Mounting holes for roof curb

1.4.2 Product overview for TFSK fans

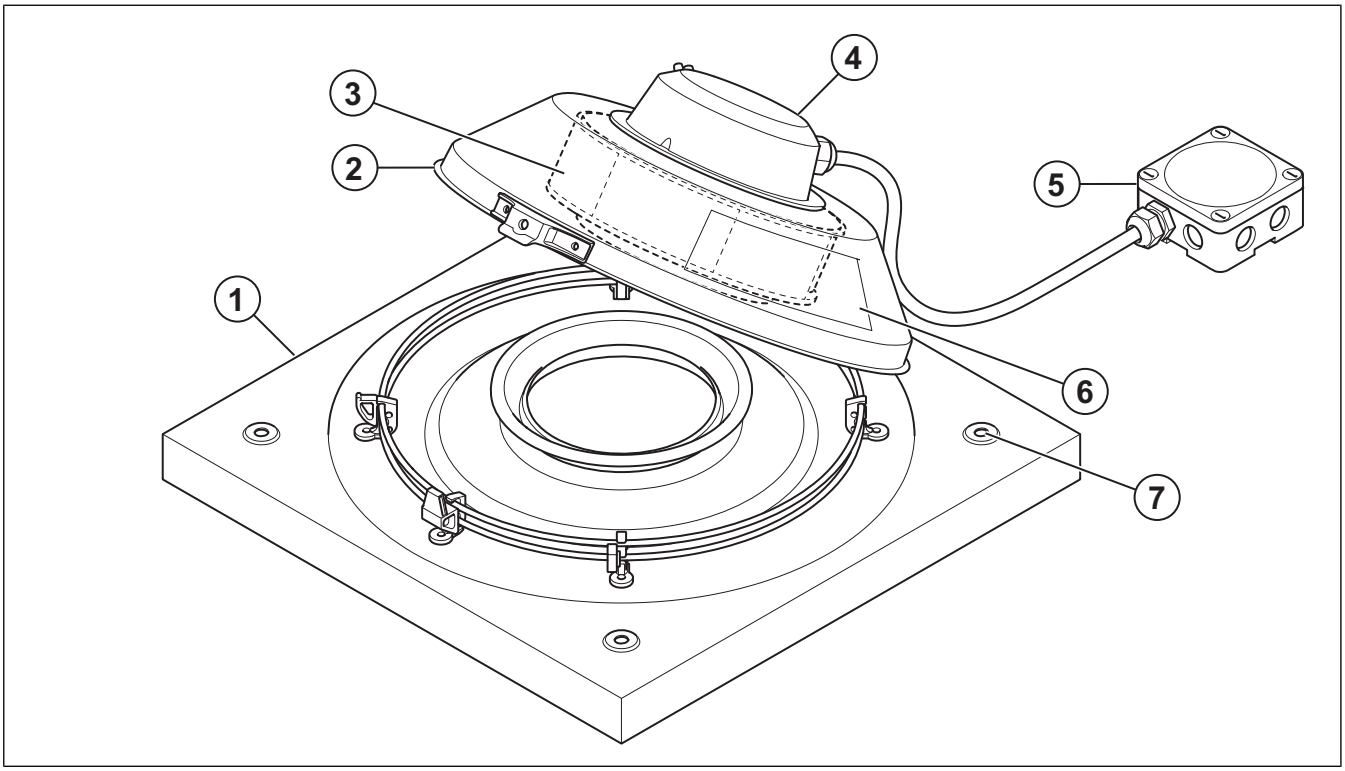

1. Base plate
2. Service Lid
3. Fan impeller
4. Motor
5. Connection box
6. Name plate
7. Mounting holes for roof curb

1.4.3 Product overview for TOE fans and TOV fans

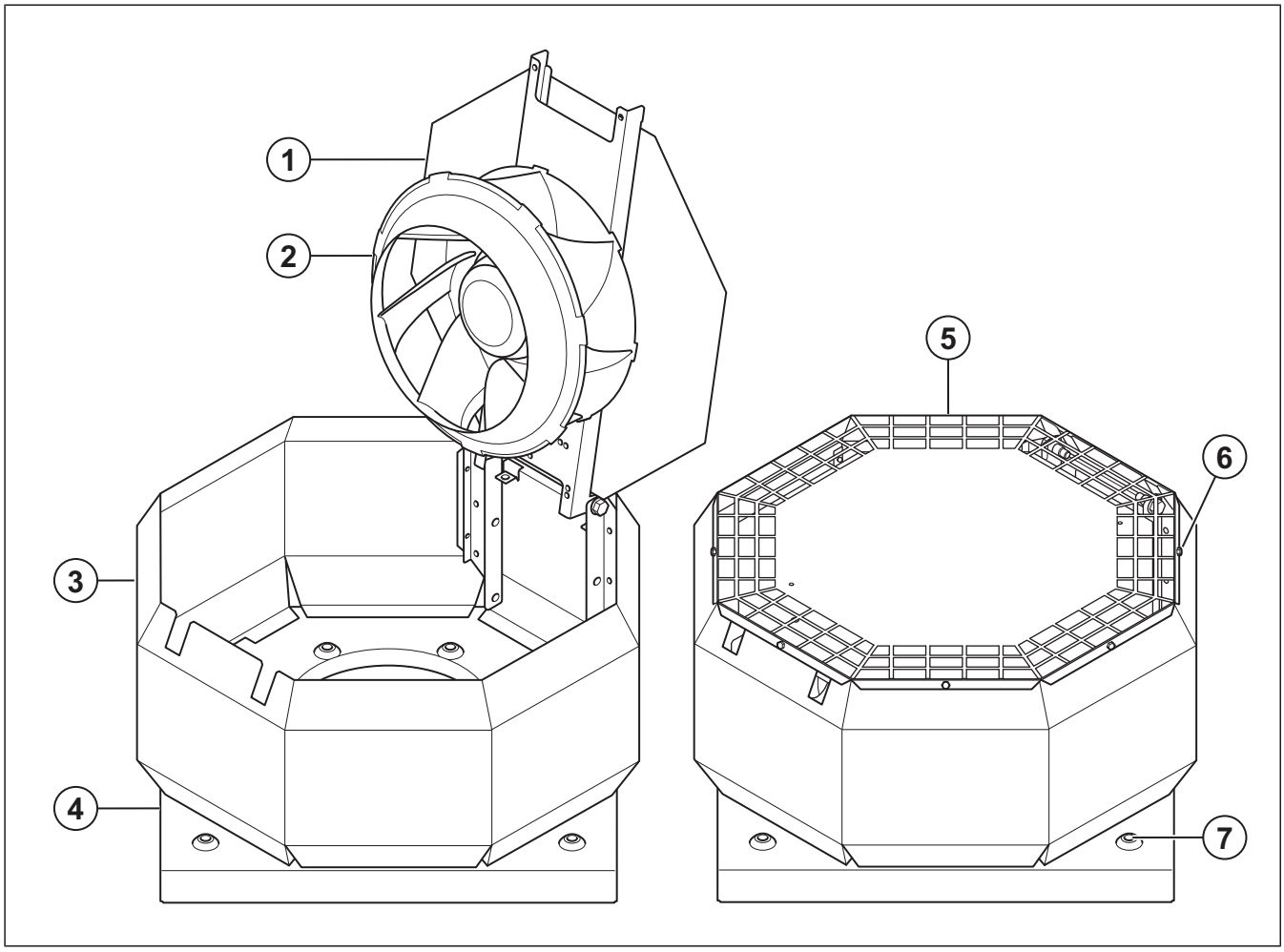

1. Service lid with motor bracket
2. Fan impeller
3. Position of connection box and name plate with air flow direction arrow. The TOE fan is delivered with connection box, the TOV fan is delivered without.
4. Base plate
5. Casing
6. Screws attaching the lid to the casing
7. Mounting holes for roof curb

1.4.4 Product overview for TFE fans

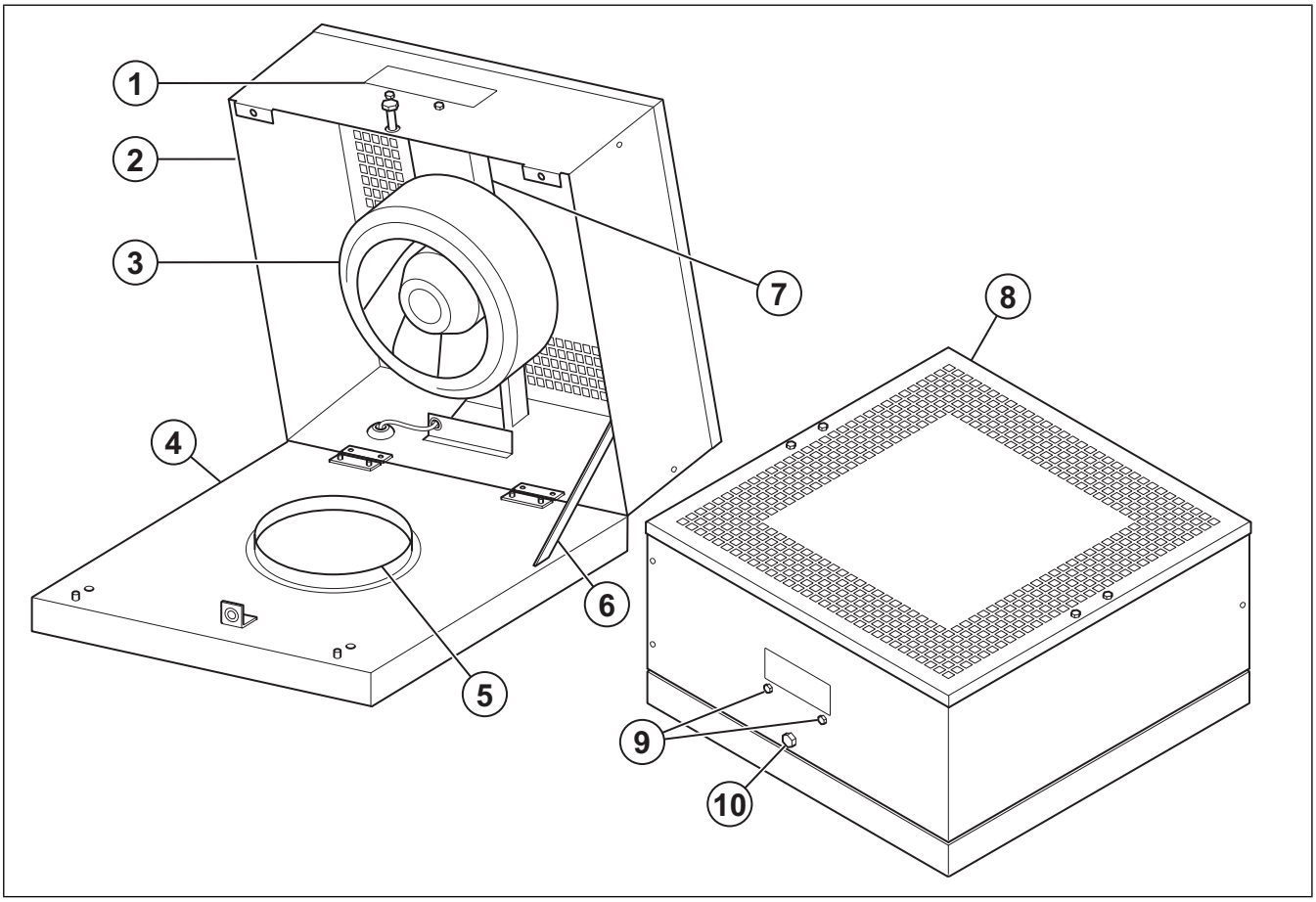

1. Name plate with airflow direction arrow
2. Mains isolator switch
3. Fan impeller and motor
4. Base plate
5. Duct connection
6. Lid lock
7. Motor bracket
8. Lid
9. Motor bracket screw
10. Screw for opening of lid

1.5 Name plate

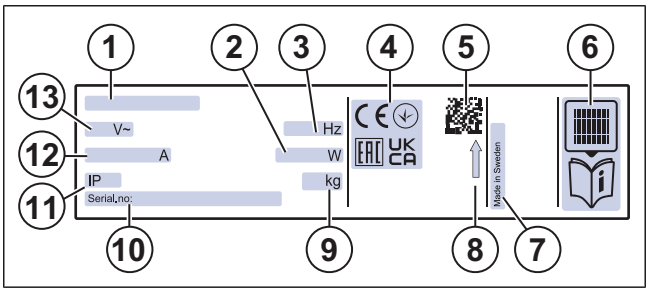

1. Type designation: Product name, dimension and motor type. Refer to 1.5.1 Type designation.
2. Input power, W
3. Frequency, Hz
4. Certifications
5. Scannable code for more information about the product[1]
6. Scannable code to go to Systemair customer portal for translated documents and spare parts[1]
7. Country of production
8. The position for the airflow direction arrow
9. Weight, kg
10. Serial number: part number/production number/production date
11. IP class, enclosure class
12. Current, A
13. Voltage, V

Note:

The data on the name plate applies to “standard air” that is specified in the standard ISO5801.

1.5.1 Type designation

Product name	TFSR	TFSR EC	TFSK	TFSK EC	TOE	TOV	TFE
Dimension	125 M	160 EC Sileo	125 M	160 EC Sileo	355–4	355–4 Sileo	220 M
	125 XL Sileo	200 EC Sileo	125 XL Sileo	200 EC Sileo		450–4	
	160 Sileo		160 Sileo				
	200		200				
	315 L**[1]		315 L**[1]				
	315 M**[1]		315 M**[1]				
	315 Sileo		315 Sileo				
Motor type	1–phase, 230 V	EC: Electronically commutated, 1–phase, 230 V	1–phase, 230 V	EC: Electronically commutated, 1–phase, 230 V	230 V, 1–phase	400 V, 3–phase	230 V, 1–phase

1. ** after the product name means that the product is sold outside EU.

1.6 Product liability

Systemair is not liable for damages that the product causes in these conditions:

- The product is incorrectly installed, operated or maintained.
- The product is repaired with parts that are not original spare parts from Systemair.
- The product is used together with accessories that are not original accessories from Systemair.
- The product is used without motor protection.

2 Safety

2.1 Safety definitions

Warnings, cautions and notes are used to point out especially important parts of the manual.

Warning

If you do not obey these instructions, there is a risk of fatal injury or injury.

Caution

If you do not obey these instructions, there is a risk of damage to the product, other materials or the adjacent area.

Note:

Information that is necessary in a given situation.

1. Use a mobile device to scan the code

2.2 Safety instructions

Warning

Read the warning instructions that follow before you do work on the product.

- Read this manual and make sure that you understand the instructions before you do work on the product.
- Obey local conditions and laws.
- The ventilation contractor and the operator are responsible for correct installation and intended use.
- Keep this manual at the location of the product.
- Do not install or operate the product if it is defective.
- Do not remove or disconnect safety devices.
- Make sure that you can read all warning signs and labels on the product when it is installed. Replace labels that have damage.
- Only permit approved personnel to work on the product and to be in the adjacent area during all work on the product.
- Make sure that you know how to stop the product quickly in an emergency.
- Use applicable safety devices and personal protective equipment during all work on the product.
- Before you do work on the product, stop the product and wait until the fan impeller stops. Make sure that there is no voltage on the motor terminals.
- If the maintenance is not correctly and regularly done, there is risk of injury and damage to the product.
- Only do the maintenance as given in this manual. Speak to Systemair technical support if other servicing is necessary.
- Always use spare parts from Systemair.
- Sound levels exceeding 70 dB(A) may occur depending on model and size. Visit www.systemair.com for more detailed information about your product.
- The product is not to be used by persons, including children, with reduced physical, sensory or mental capabilities, or lack of experience and knowledge, unless they have been given supervision or instruction.
- Do not allow children to play with the device.

2.3 Personal protective equipment

Use personal protective equipment during all work on the product.

- Approved eye protection
- Approved protective helmet
- Approved hearing protection
- Approved protective gloves
- Approved protective shoes
- Approved work clothing

3 Transportation and storage

Warning

Make sure that the product does not get damaged or wet during transportation. A damaged or wet product can cause fire or electric shock.

- Before you move the product to the installation location, examine the packaging for damages.
- Do not move the product by the cables, terminal box, fan impeller, protection grille, inlet cone or silencer.
- If lifting equipment is used, make sure that the lifting equipment can hold the weight of the product. Refer to the name plate for information. Do not lift the product by the packaging.

Warning

Do not walk below a lifted product.

- Keep the correct side of the packaging up during transportation. Refer to the arrows on the packaging.
- Load and unload the product carefully.
- Keep the product in a dry and clean location during storage. Make sure that the ambient temperature during storage is between –10 and +30 °C. A stable ambient temperature prevents damage from condensation.
- Keep the product in storage for maximum 1 year.

4 Installation

4.1 To do before installation

- Make sure that you have the necessary installation accessories:
  - If you install the product with free suction, it is necessary to install a protection grille. Make sure that the safety distance agrees with the standard ISO 12499.
- Use installation material with fire resistance rating suitable for the installation location.
- Examine the packaging for transportation damage. Make sure to remove the packaging from the product.
- Examine the product and all components for damage.
- Make sure that the motor effect and the fan performance agrees with the expectations at the installation location.
- Make sure that the information on the name plate and the motor name plate agrees with the operation conditions.
- Install the product in a location where there is space for commissioning, troubleshooting and maintenance.
- Make sure that the installation location is clean and dry, for full safety during electrical work.
- Make sure that the installation surface has sufficient capacity to hold the weight of the product.
- Refer to the airflow direction arrows on the name plate or on the product to install the product in the correct position.
- Make sure that all cable glands are tight against the cables to prevent leaks.

4.2 To install the product

4.2.1 To install the TFSR fan

Note:

Make sure the installation location has space for maintenance, and that the roof joints can hold the weight of the product.

1 Install the product so that unwanted vibrations are not transmitted to duct systems or roof beams.

Note:

Systemair recommends to install the product together with a roof curb TOS or TOB. The roof curbs are available as accessories.

2 The bottom plate on the TFSR is prepared with holes for installation with a roof curb. Refer to www.systemair.com for instructions how to install roof curb TOS or TOB.

3 Attach the fan on to the roof curb with the 4 supplied screws.

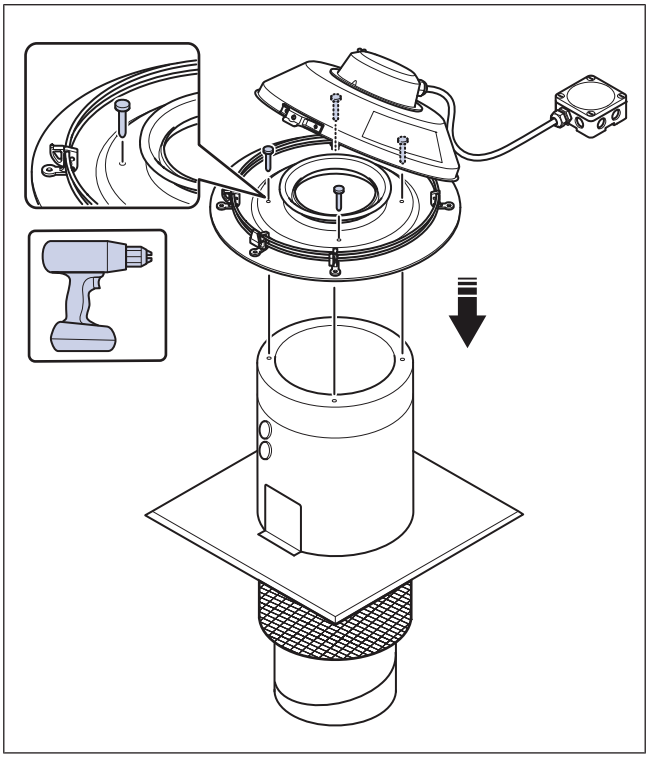

4 Connect the primary electric supply to the connection box of the product. Refer to 12.3 Wiring diagrams.

Note:

If a connection spigot is used, the TFSR bottom plate is marked for drilling of installation holes. Drill holes according to the dimension of the connection spigot.

4.2.2 To install TFSK, TOE, TOV and TFE fans

Note:

TOE, TOV and TFE must be installed horizontally.

Note:

Make sure the installation location has space for maintenance, and that the roof joints can hold the weight of the product.

1 Install the product so that unwanted vibrations are not transmitted to duct systems or roof beams.

Note:

Systemair recommends to install the product together with a roof curb. The roof curb is available as an accessory.

2 Attach the fan directly on to the roof curb with 4 screws.

3 Connect the primary electric supply to the connection box of the product. Refer to 12.3 Wiring diagrams. For the TFE fan, loosen the screws that hold the motor bracket to access the terminals that are attached to the motor bracket.

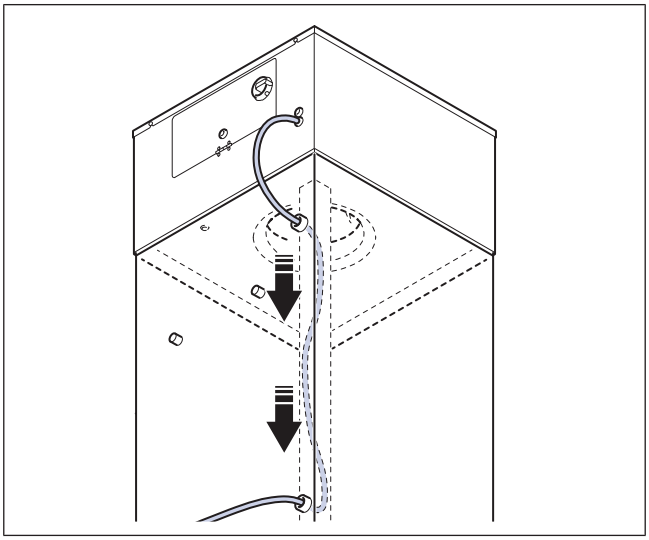

4 Pull the primary electric supply cable trough the cable gland on the connection box and trough the cable gland on the roof curb.

5 Use the integrated cable hose to put the primary electric supply cable safely to the corner on the inner side of the roof curb.

6 Install the roof curb on the roof in accordance with applicable building standards and connect the fan to a duct system.

Note:

Obey local laws and regulations for installation of the roof curb on the roof.

5 Electrical connection

5.1 To do before the electrical connection

- Make sure that the electrical connection agrees with the product specification on the motor name plate.
- Make sure that the environment for electrical connection is clean and dry.
- Make sure that the wiring diagram that is included with the supply of the product agrees with the terminals in the connection box.

5.2 To connect the product to the power supply

- Complete the electrical connection for the motor. Refer to the motor wiring diagram that is included with the product.
- Make sure that the cross section of the protective earthing is equal to or larger than the cross section of the phase conductor.
- Install a circuit breaker in the permanent electrical installation, with a contact opening of a minimum 3 mm at each pole.
- If a residual current device (RCD) is installed, make sure that it is an all-current sensitive RCD. Consider if the product has a frequency converter, uninterruptible power supply (UPS), or an EC motor. EC motors have a leakage current to earth that is <=3.5 mA.

5.3 Speed controller for AC motors

Note:

The speed controller alternatives are different for different motor types. Make sure that your motor is compatible with the speed controller type before you use it.

The speed can be controlled by voltage reduction using a transformer. It is also possible to control the fan speed with frequency converter if the installed frequency converter has built in all-pole sine filter and shielded cables are not needed.

5.4 To install motor protection for AC motors

- If the product has an built in motor protection, reset by disconnecting the product from power for 60 seconds.
- If the motor has temperature monitors such as thermal contacts (TK) or thermistors lead out into the terminal box, these must always be connected in the control circuit using appropriate motor protection.
- Make sure that an overheated motor cannot start again automatically when it becomes cool.
- Install the motor cables and the temperature monitor apart.
- If the motor does not have temperature monitors, install a motor protection switch.

5.5 Speed controller for EC motors

- EC motors are controlled through a stepless 0–10 V signal.
- Do not control the fan speed by adjusting the power supply to the fan.
- Refer to 12.3 Wiring diagrams and the instruction manual for the external speed controller.

5.6 Motor protection for EC motors

EC motors have an integrated motor protection. Reset the motor protection by disconnecting the fan from power supply for 60 seconds.

6 Commissioning

Caution

- If strong vibrations occur during commissioning, immediately increase or decrease the fan speed until the vibrations are decreased. Continuous strong vibrations can cause damage to components.
- Do not increase the fan speed to a higher rpm value than the maximum value that is given on the name plate.

The commissioning report is found at www.systemair.com.

6.1 To do before the commissioning

- Make sure that the installation and electrical connection are correctly done.
- Visually examine the product and accessories for damage.
- Make sure that the safety devices are correctly installed.
- Make sure that there are no blockages in the air inlet and the air outlet.
- Make sure that installation material and unwanted objects are removed from the product and the ducts.

6.2 To do the commissioning

1. Set the installed safety switch in the OFF position.
2. If it is possible to get access to the fan impeller, do the steps that follows:
   a. If it is necessary, remove parts of the installation.
   b. Turn the fan impeller by hand and make sure that it turn easily.
   c. Record the result in the commissioning report.
3. Make sure to turn the product in a direction that agrees with the related arrow on the product.
   a. Record the result in the commissioning report.
4. If you removed parts of the installation to get access to the fan impeller, install the removed parts again.
5. Set the installed safety switch in the ON position.
6. Start the product.
7. Set the minimum operation speed.
8. Increase the operation speed gradually to the maximum operation speed.
   a. Examine the vibrations in the casing and the bearing areas at all speed levels.
   b. Make sure that the vibrations agree with the specifications in ISO 14694.
   c. Make sure that none of the speed levels cause unwanted noise in the product.
   d. Record the result in the commissioning report.
9. Record the necessary data in the commissioning report.

7 Operation

Caution

EC motors must be set to ON/OFF via the control input. To stop the product via mains supply decreases the life time of the motor. Systemair recommends to install external speed controller for easy access to control the input signal.

7.1 To start a product with an AC motor

1. Set the installed safety switch in the ON position.
2. Install the external speed controller. Refer to the instruction manual for the installed speed controller.

7.2 To start a product with an EC motor

1. Make sure that the 0–10 V signal is set to “0” with the speed controller.
2. Set the installed safety switch in the ON position and wait 5 seconds.
3. Adjust the fan speed with the 0–10 V signal speed controller. If an external speed controller is not installed, adjust the fan speed directly with the integrated potentiometer.

7.3 To stop the product

1. Set the installed speed controller in the OFF position. Refer to the instruction manual for the installed speed controller.
2. Set the installed safety switch in the OFF position.

7.3.1 To stop the product in an emergency

- Set the installed safety switch in the OFF position.

8 Maintenance

Warning

Set the installed safety switch in the OFF position before you do the maintenance unless the instructions tell you differently. Make sure that the safety switch is not accidentally set in the ON position.

8.1 Maintenance schedule

The intervals are calculated from continuous operation of the product.

Maintenance task	Usual operation conditions		Unusual operation conditions. [1]		
	Each 6 months	Each year	Each 3 months	Each 6 months	Each year
Visually examine the product and its components for damage and corrosion and dirt.		X		X	
Examine the fan impeller for damage and imbalance.		X		X	
Clean the product and the ventilation system.	X		X		
Do a check of all fasteners and make sure that they are fully tightened.		X			X
Make sure that the product and its components are correctly operated.	X			X	
Measure the power consumption and compare the result with the information on the name plate.		X		X	
If vibration dampers are installed, make sure that they operate correctly and examine them for damage and corrosion.		X			X
Make sure that the electrical protective equipment and the mechanical protective equipment operates correctly.		X			X
Make sure that you can read the name plates of the product.		X		X	
Examine all cable connections for damage. Make sure that the cable glands are tight against the cables.		X			X
If flexible connections are installed, examine them for damage.	X			X	

1. The unusual operation conditions are classified as follows: If a stable ambient temperature is higher than 30 °C or lower than -10 °C, if the temperature changes are large or if very contaminated air is transported.

8.2 To clean the product

Caution

- Do not clean the product with a high-pressure washer.
- Do not clean the product with steel brushes or sharp objects.
- Do not bend the fan impeller blades.
- Be careful not to move the balance weights on the fan impeller.

- Remove dirt from the fan and the duct.
- If access to the fan impeller is possible, clean the fan impeller with a moist cloth or soft brush.

8.3 Spare parts

- When you send an order for spare parts, include the serial number of the product. The serial number is found on the name plate.
- For more information about spare parts, contact technical support.
- Always use spare parts from Systemair.
- To find spare parts, refer to the scannable code on the name plate.

9 Troubleshooting

Note:

If you cannot find a solution to your problem in this section, speak to Systemair technical support.

Problem	Cause	Solution
The product does not operate smoothly.	The fan impeller is not correctly balanced.	Speak to Systemair technical support.
	There is dirt on the fan impeller.	Clean the fan impeller carefully. Refer to 8.2 To clean the product.
	The fan impeller has damages or deformations because the transported air contains aggressive media.	Speak to Systemair technical support.
	The fan impeller does not turn in the correct direction.	Make sure that the electrical connection is correctly done.
	The fan impeller has deformations because of too high temperatures.	• Replace the fan impeller. • Make sure that the temperature of the transported air is not higher than the value on the name plate.
	There are unusually strong vibrations in the product or the duct system.	Make sure that the product is correctly installed. Do a check of the duct system.
	The product is operated in a resonant frequency range.	Increase or decrease the fan speed until the product operates smoothly. Refer to 6 Commissioning.
The air output is not sufficient.	The fan impeller does not turn in the correct direction.	Make sure that the electrical connection is correctly done.
	The electrical connection is not correctly done.	Make sure that the electrical connection agrees with the wiring diagrams.
	The air pressure is too low because of incorrect installation.	Do the necessary changes in the duct system and installed components to increase the air pressure. Refer to 6 Commissioning.
	The spring return damper on outdoor or exhaust duct is closed or not fully open.	Adjust the spring return damper.
	There is blockage in the air inlet or the duct system.	Remove the blockage.
	The product is not applicable for the installation location.	Make sure that the product is applicable for the installation location.
	The motor power is decreased because of too high temperature in the motor. **Note:** This is applicable for EC motors only.	• Do a check of the ambient temperature. • Make sure that the space around the motor is sufficient to keep the temperature down.
There is unusual noise when the product starts or operates.	There is strain in the connections of the duct system.	Loosen the connections, align the parts of the duct system correctly and tighten the connections.

Problem	Cause	Solution
Thermal contacts, PTC or resistors are released.	The fan impeller does not turn in the correct direction.	Make sure that the electrical connection is correctly done.
	A phase loss occurred.	If the motor is a 3-phase motor, make sure that no phase is missing. **Note:** This is not applicable for EC motors.
	The motor is overheated.	• Do a check of the motor cooling impeller. • If it is possible, measure the resistance to do a check of the motor winding.
	The capacitor is not connected or not correctly connected. **Note:** This is not applicable for EC motors or 3–phase AC motors.	Connect the capacitor correctly. Refer to the included motor wiring diagram.
	There is blockage in the motor.	Speak to Systemair technical support.
The fan speed does not get the nominal value.	Defective motor winding.	If it is possible, measure the resistance to do a check of the motor winding.
	The speed control is not correctly set.	Set the speed control correctly.
	The fan impeller cannot turn freely because of mechanical blockage.	Remove the blockage.
	Phase loss occurs.	If the motor is a 3-phase motor, make sure that no phase is missing.
The motor does not rotate.	A component in the power supply is defective.	Do a check of the power supply. Replace defective components and connect the power supply again.
	The electrical connection is not correctly done.	Make sure that the electrical connection agrees with the wiring diagrams.
	The motor protection is released because the motor is overheated.	Let the motor become cool. Reset the motor protection. Find the cause of the overheated motor.
	A phase loss occurred.	If the motor is a 3-phase motor, make sure that no phase is missing.
The electronic components or the motor is overheated.	The motor is overloaded or the ambient temperature is too high.	Let the motor become cool. Reset the motor protection. Find the cause of the overheated motor.
	The motor is overloaded.	Make sure that the product is applicable for the installation location.
	The ambient temperature is too high.	Make sure that the product is applicable for the installation location.
	The cooling of the product is not sufficient.	Make sure that the space around the motor is sufficient to keep the temperature down.

10 Disposal

The product follows the WEEE directive. This symbol on the product or the packaging of the product shows that this product is not domestic waste. The product must be recycled at an approved disposal location for electrical and electronic equipment.

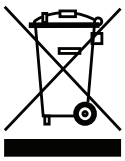

10.1 To disassemble and discard the parts of the product

1 Disconnect and disassemble the product in the opposite sequence of electrical connection and installation.

2 Recycle the product parts and the packaging at an applicable disposal location.

3 Obey the local and national requirements for disposal.

11 Warranty

For warranty claims, send a written maintenance plan and the commissioning report to Systemair. The warranty is only applicable for these conditions:

- The product is correctly installed and operated.
- Motor protection is used.
- The instructions in the data sheets are obeyed.
- Maintenance instructions are obeyed.
- The product is operated for a minimum of 1 hour each month.

12 Technical data

12.1 Technical data overview

Max. temperature of transported air, °C	Refer to the data sheet in the online catalogue at www.systemair.com.
Max. ambient temperature, °C	
Sound pressure, dB	
IP class	
Voltage, current, frequency, enclosure class, weight	Refer to the name plate. Refer to 1.5 Name plate for more information.
Motor data	Refer to the motor name plate or the technical documentation from the motor manufacturer.

12.2 Product dimensions

Note:

If the unit of measure is not specified, the dimensions are given in millimetres.

Note:

The arrow in the dimension drawing shows the direction of the airflow.

12.2.1 Product dimensions for TFSR fans

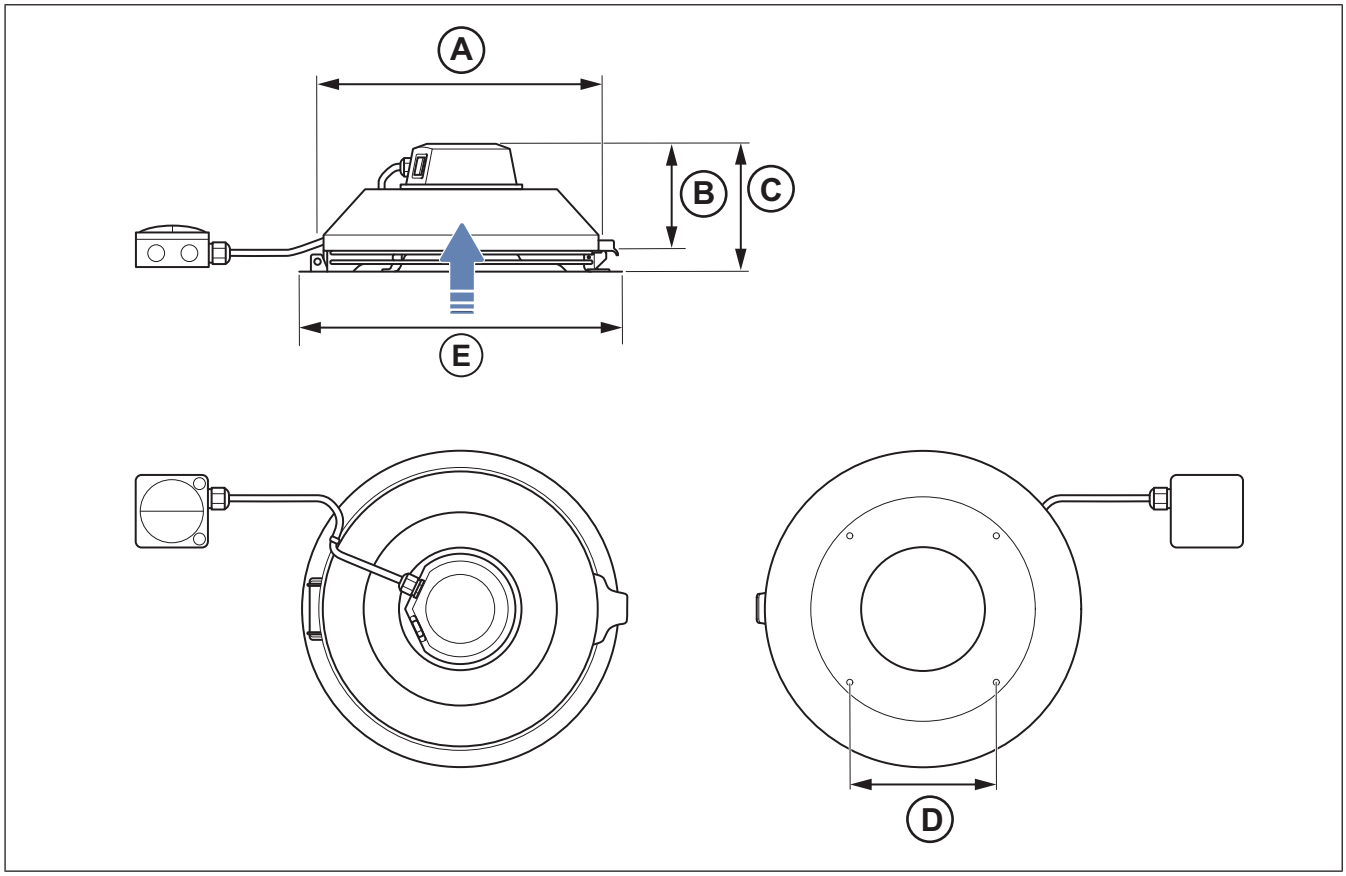

	ØA	B	C	D	ØE
TFSR 125 M	284	119	144	205	315
TFSR 125 XL Sileo	284	119	144	205	315
TFSR 160 Sileo	334	120	145	205	380

	ØA	B	C	D	ØE
TFSR 200	364	123	160	250	439
TFSR 315 L**[1]	404	160	206	250	485
TFSR 315 M**[1]	404	160	206	250	485
TFSR 315 Sileo	404	160	206	250	485
TFSR 160 EC Sileo	334	120	145	205	380
TFSR 200 EC Sileo	364	123	160	250	439

1. ** after the product name means that the product is only for sale outside EU.

12.2.2 Product dimensions for TFSK fans

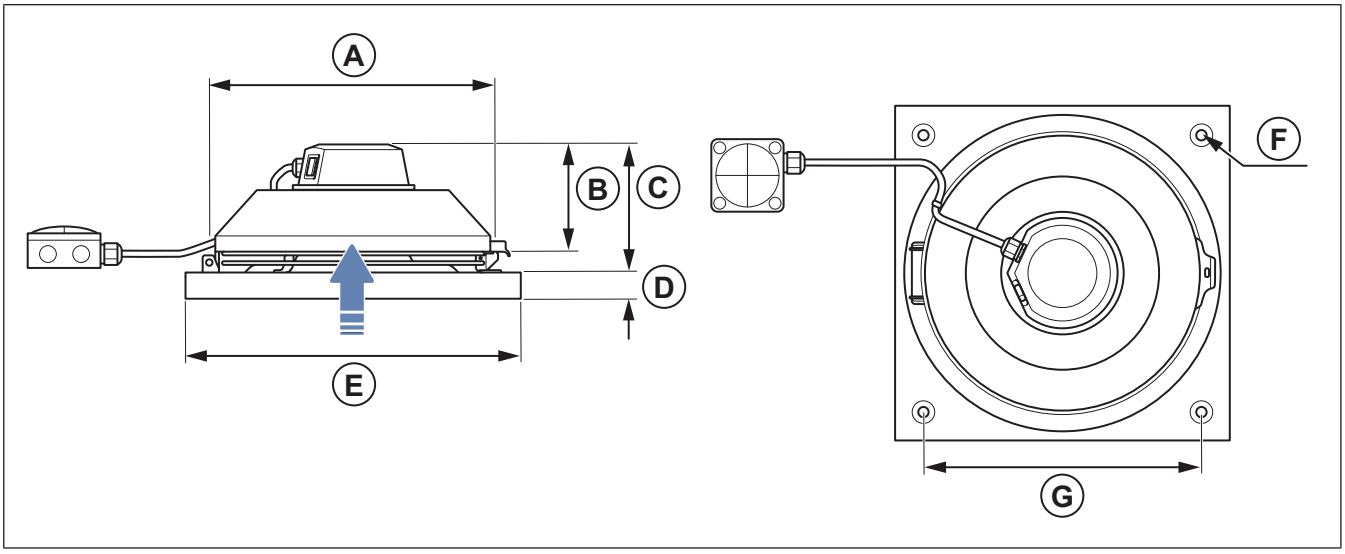

	ØA	B	C	D	E	ØF (4x)	c/c G
TFSK 125 M	284	119	144	36	321	9	245
TFSK 125 XL	284	119	144	36	321	9	245
TFSK 160	334	120	145	36	421	9	330
TFSK 200	364	123	160	36	421	9	330
TFSK 315 L**[1]	404	160	206	36	521	11	450
TFSK 315 M**[1]	404	160	206	36	521	11	450
TFSK 315 Sileo	404	160	206	36	521	11	450
TFSK 160 EC Sileo	334	120	145	36	421	9	330
TFSK 200 EC Sileo	364	123	160	36	421	9	330

1. ** after the product name means that the product is only for sale outside EU.

12.2.3 Product dimensions for TOE fans and TOV fans

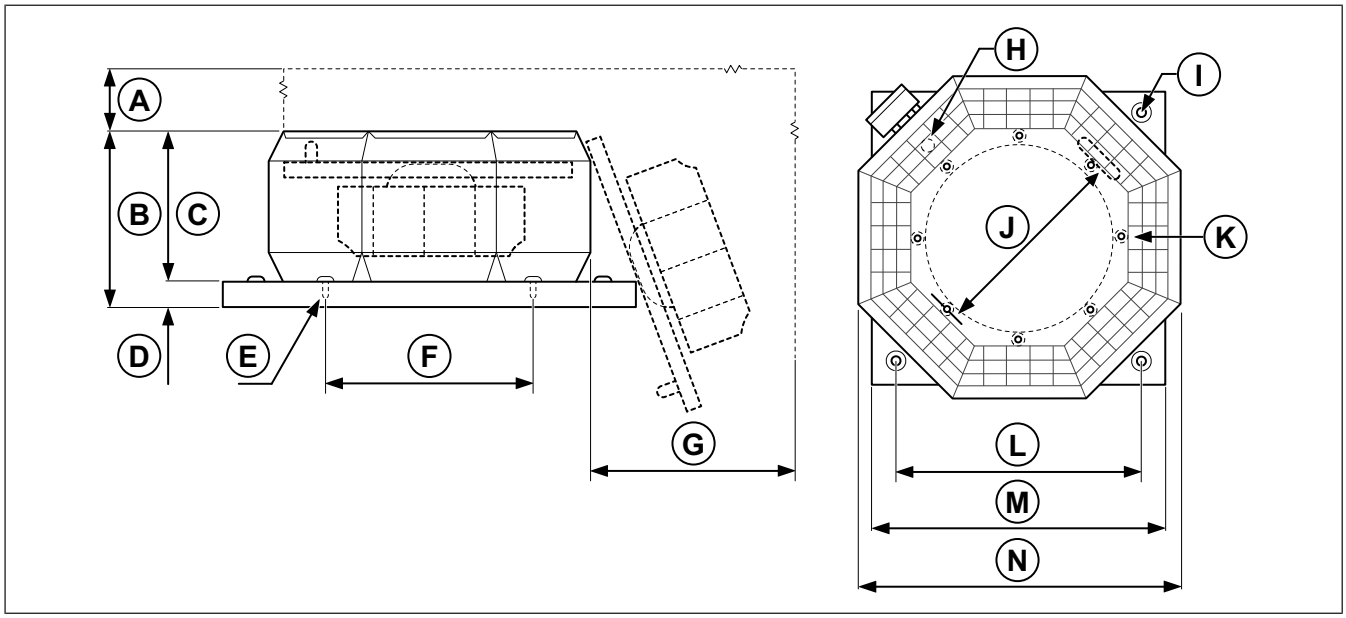

	A	B	C	D	E	ØF	G	H	ØI	ØJ	K	L	M	N
TOE /TOV 355–4	600	340	290	50	M8 (8x)	395	600	M20-x1.5	12 (4x)	395	M8 (8x)	450	557	615
TOV 450–4	800	400	350	50	M8 (8x)	487	800	M20-x1.5	14 (4x)	487	M8 (8x)	590	757	830

12.2.4 Product dimensions for TFE fans

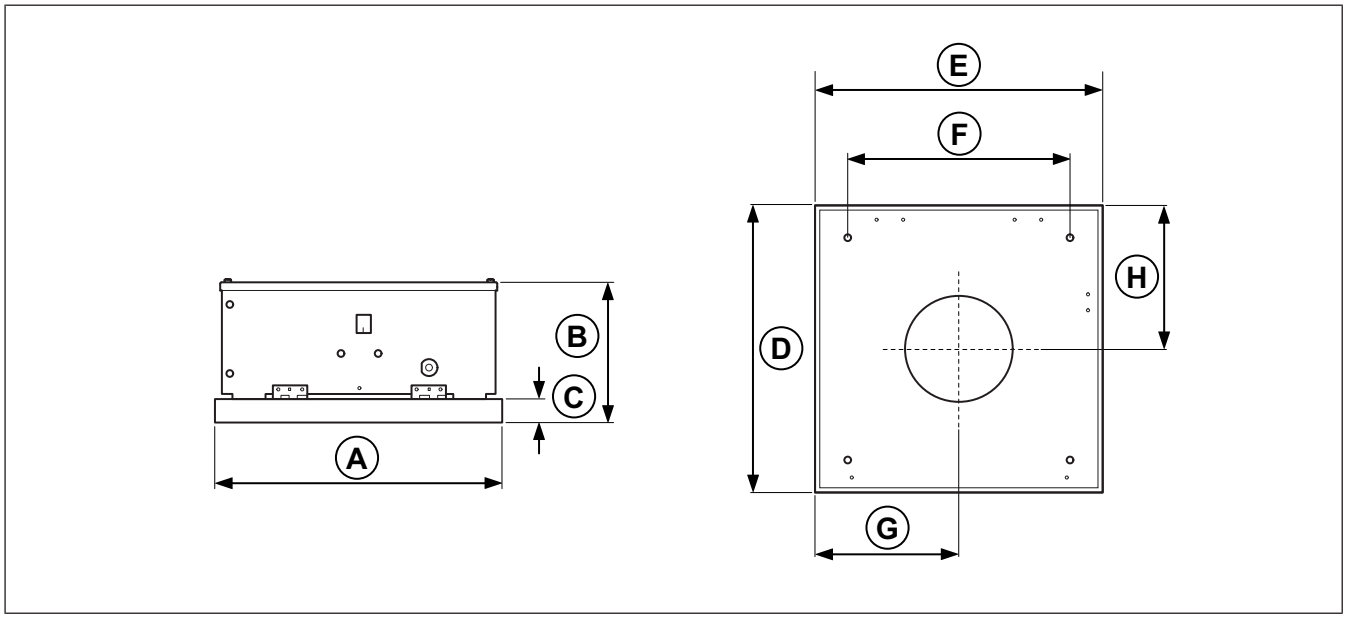

	A	B	C	D	□E	c/c F	G	H
TFE 220 M	421	209	36	421	421	300	209.5	209.5

12.3 Wiring diagrams

Abbreviation in wiring diagram	Cable colour
RD	Red
YE	Yellow
BU	Blue
WH	White
GN	Green
BN	Brown
BK	Black
GR	Grey
GY	Green/Yellow

12.3.1 Wiring diagrams for AC fans

TFSR fans	TFSK fans	1–phase 230 V
TFSR 125 M	TFSK 125 M	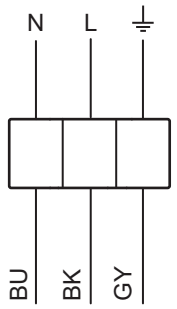
TFSR 125 XL Sileo	TFSK 125 XL Sileo	
TFSR 160 Sileo	TFSK 160 Sileo	
TFSR 200	TFSK 200	
TFSR 315 L**[1]	TFSK 315 L**[1]	
TFSR 315 M** [1]	TFSK 315 M**[1]	
TFSR 315 Sileo	TFSK 315 Sileo	

1. ** after the product name means that the product is sold outside EU.

TOE fans	1–phase 230 V
TOE 355–4	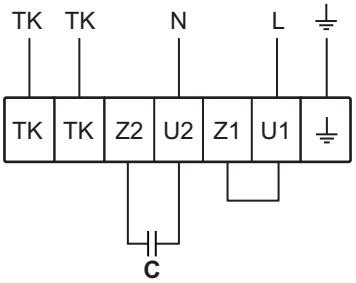

TOV fans	3–phase 230 V	3–phase 400 V
TOV 355–4	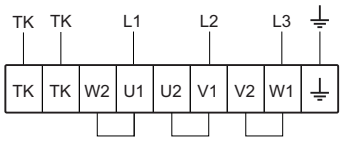	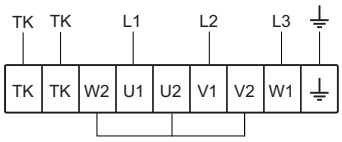
TOV 450–4		

TFE fans	1–phase 230 V
TFE 200 M	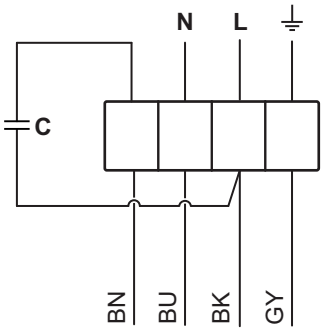

12.3.2 Wiring diagrams for EC fans

Note:

If an internal potentiometer is installed on the terminal block from the factory, remove the internal potentiometer when you use an external speed controller for the EC fan.

TFSR EC fans	TFSK EC fans	1–phase 230 V
TFSR 160 EC	TFSK 160 EC Sileo	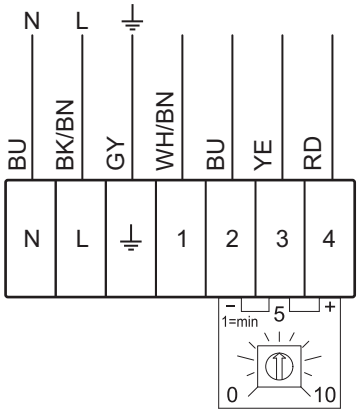
TFSR 200 EC	TFSK 200 EC Sileo	

12.3.3 Wiring diagrams for speed controller for AC motors

Note:

The selection of electrical accessories must be done in line with the technical parameters of the product.

RE	
Manual 5-step transformer.	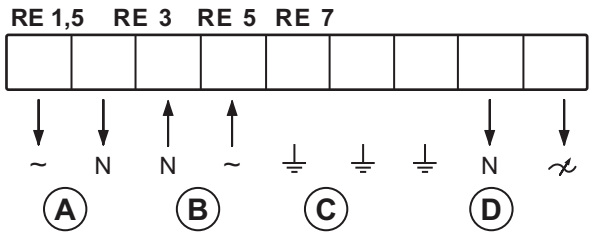

A. Relay connection. There is always 230 V between ~ and N when the transformer knob is in one of the positions 1–5.

B. Mains supply

C. Earth

D. Fan

REE — Thyristor	
REE 1 and REE 2 - Surface mounting or with flush mounting casing included.	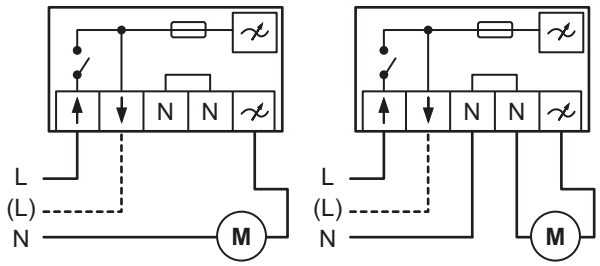
REE 4 - Surface mounting. **Note:** Starting currents must be considered when you select the speed controller type. Products that are used with this speed controller must have a built-in overheating protection and must be designed for thyristor speed control.	

- L: the connection with cutting function on the speed control.
- (L): the connection without cutting function.

REU	
Manual 5-step transformer for high/low speed operation. Used together with a change-over contact, for example a timer or a thermostat.	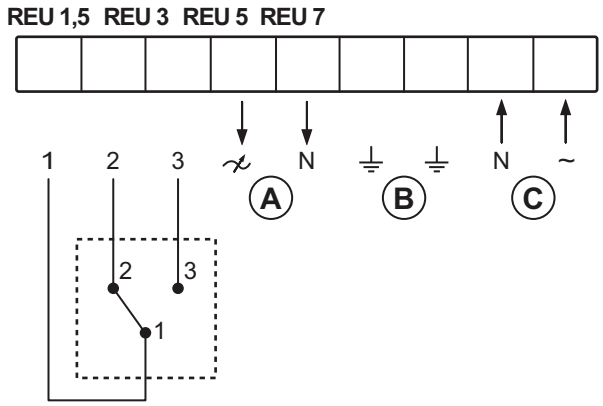

1. External change-over contact
2. Left selector switch
3. Right selector switch

A. Fan
B. Earth
C. Mains supply

RTRE	
Manual 5-step transformer with motor protection.	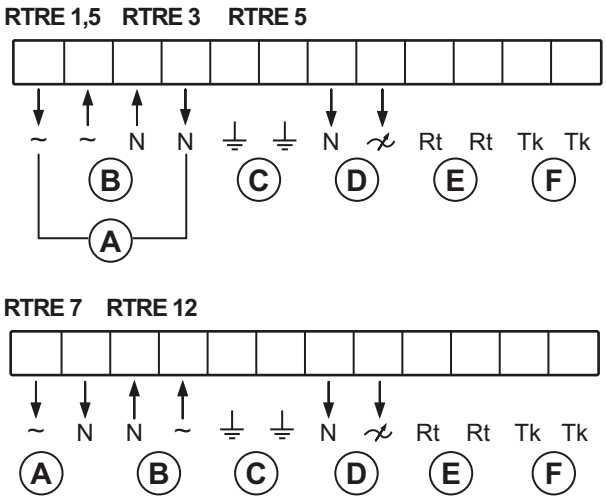

A. Relay connection. There is always 230 V between ~ and N when the transformer knob is in one of the positions 1–5.

B. Mains supply

C. Earth

D. Fan

E. Thermostat

F. Motor protection. If the motor protection is not in use, Tk must be looped together.

FRQ5S-E-6A

Frequency converter with built-in all-pole sine filter and 5-step switch.

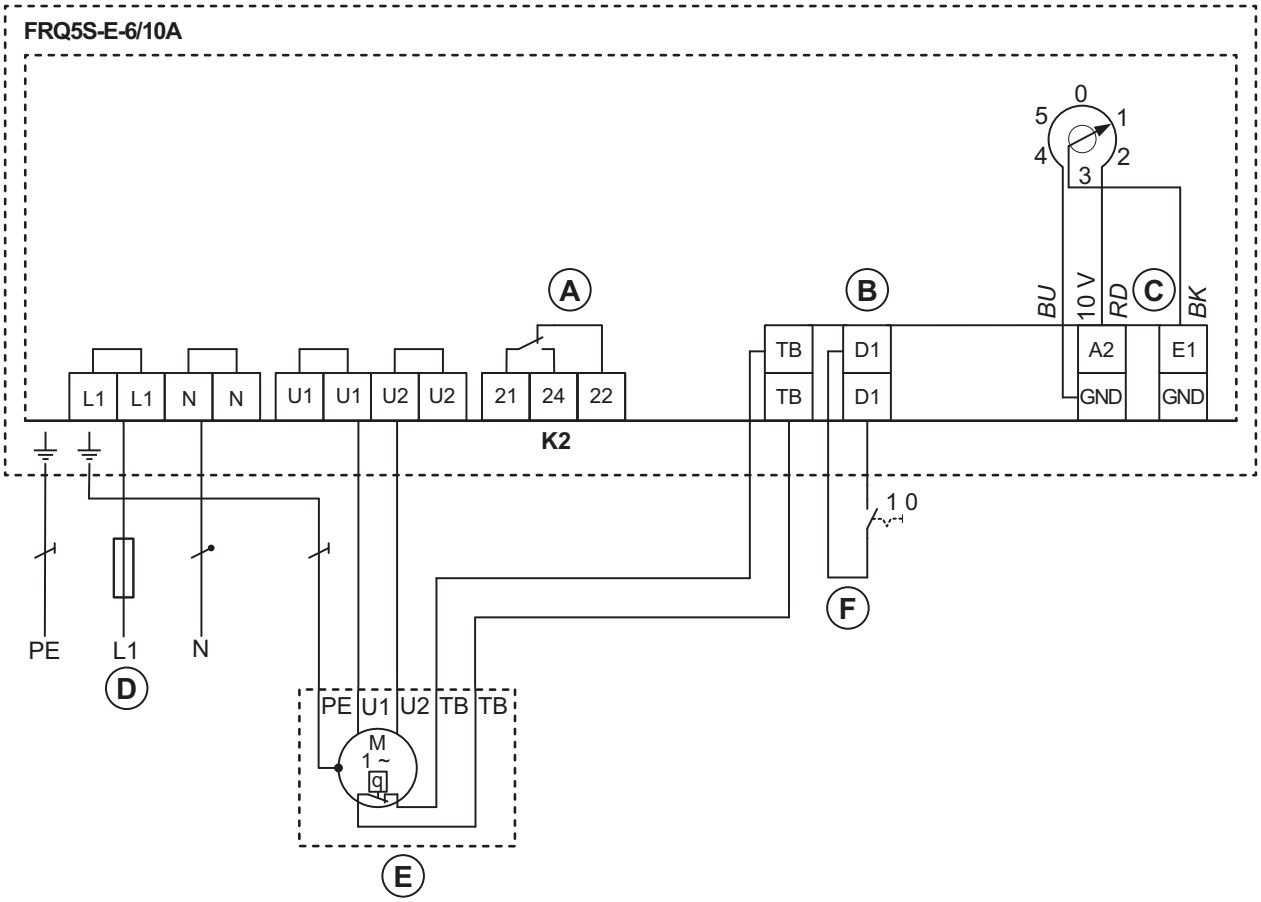

A. Contact rating, maximum AC 250 V/2 A

B. Digital In 1

C. Analog In 1

D. Mains supply, 1–phase 208...277 V, 50/60 Hz

E. Motor with internal thermal contacts

F. OFF/ON

RTRD
A 3-phase transformer that controls the fan speed by altering the supply voltage in five fixed steps. The steps are adjusted by using the control knob on the front of the unit.

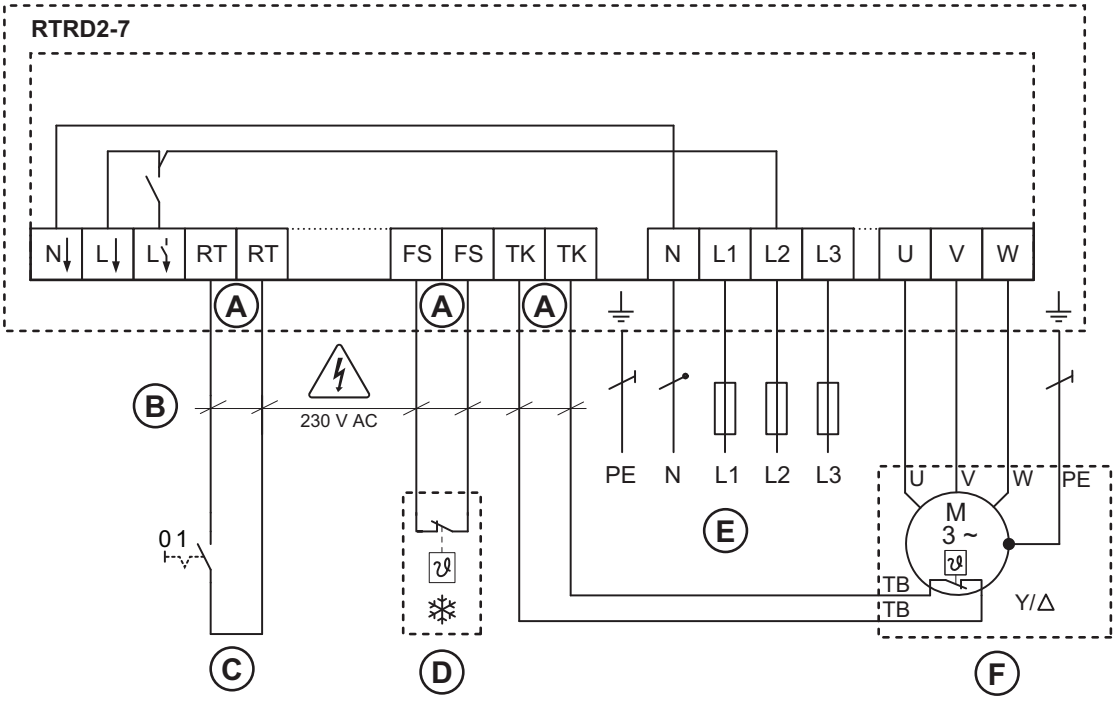

A. If the function is not necessary, the terminals must be bridged

B. Contact rating, 230 V AC/maximum 1 A

C. OFF/ON

D. OFF/ON (only by reset)

E. Mains supply, 3–phase 400 V 50/60 Hz

F. 3–phase motor with internal thermal contacts

RTRDU
Manual 5–step transformer with motor protection — a 3–phase transformer that controls the fan speed by altering the supply voltage in five fixed steps. The steps are adjusted by using the control knob on the front of the unit.

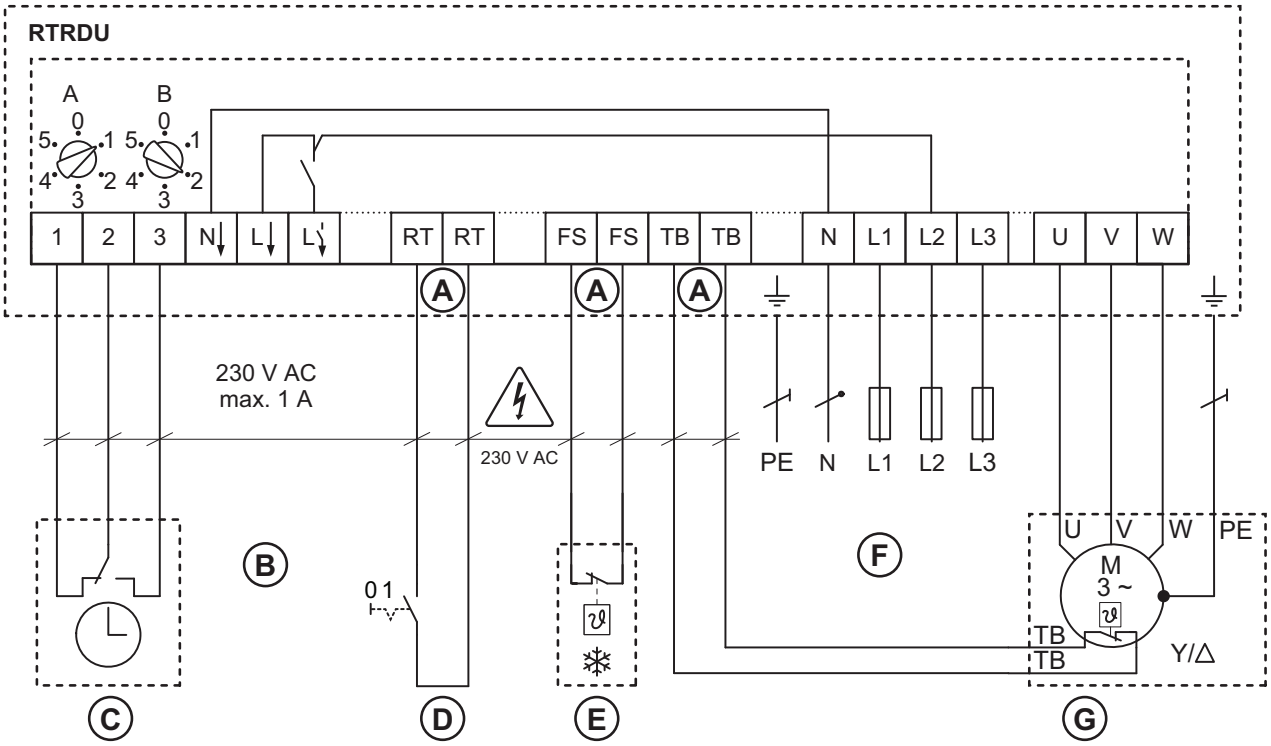

A. If the function is not necessary, the terminals must be bridged

B. Contact rating, 230 V AC/maximum 1 A

C. Time switch

D. OFF/ON

E. OFF/ON (only by reset)

F. Mains supply, 3–phase 400 V 50/60 Hz

G. 3–phase motor with internal thermal contacts

12.3.4 Wiring diagrams for speed controllers for EC motors

Note:

If an internal potentiometer is installed on the terminal block from the factory, remove the internal potentiometer when you use an external speed controller for the EC fan.

MTP 10

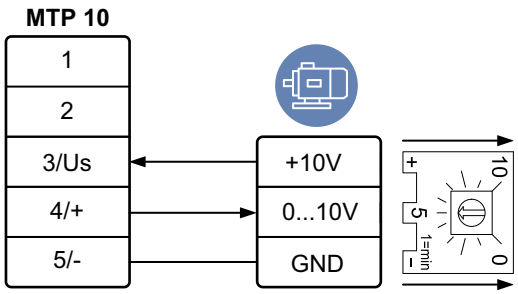

MTP 20

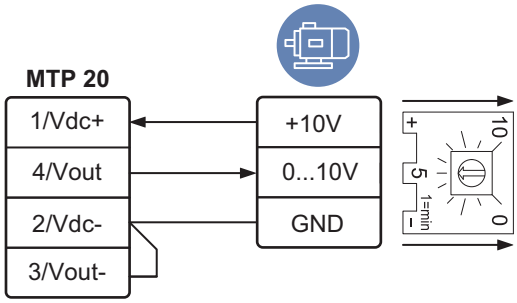

EC-Basic

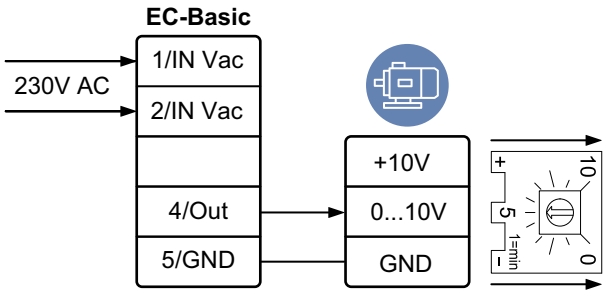

MTV–1/10

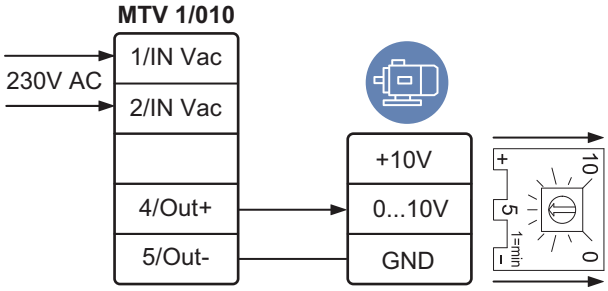

S-5EC/FRQ

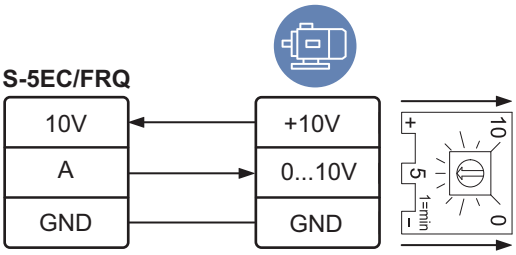

12.3.5 Wiring diagrams for ON/OFF controls for EC motors

CO2RT-R(-D)

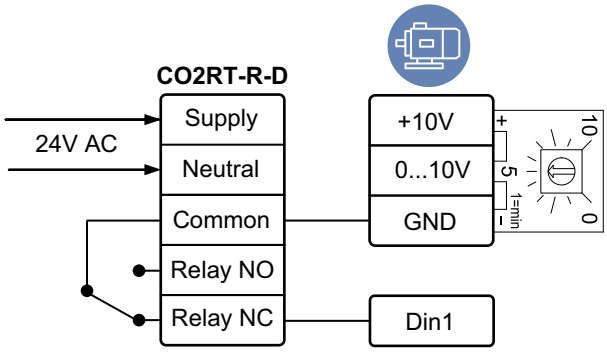

IR24–P

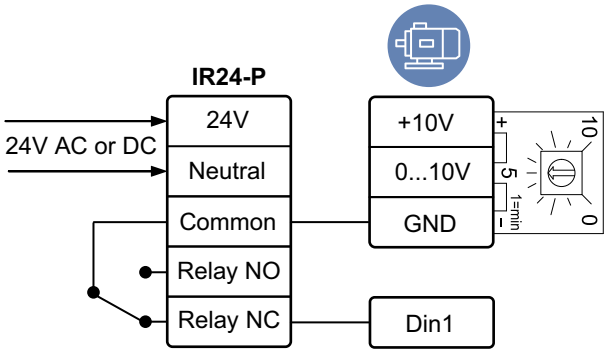

12.3.6 Wiring diagrams for demand control for EC motors

EC Basic	
EC Basic-T for temperature control	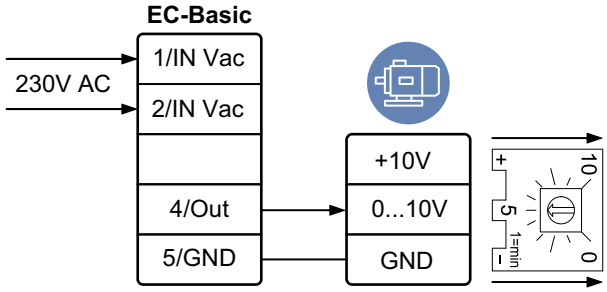
EC Basic-CO2/T for temperature and CO_2 control	
EC Basic-H for humidity control	

EC Basic-U	
EC Basic-U for universal 0-10 V control	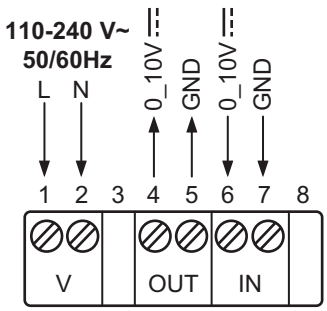

MM6-24/D output signal selector	
Compares signals from connected inputs and transfers the signal to the control output.	

1	Input 1 0...10 V
2	Input 2 0...10 V
3	Input 3 0...10 V
4	Input 4 0...10 V
5	Input 5 0...10 V
6	Input 6 0...10 V

7	System neutral	Mains supply
8	24 V AC	
9	Signal neutral	
10	Signal neutral	
11	Output minimum 0...10V	
12	Output maximum 0...10V	

PCA 1000D2 Pressure controller	
For constant air volume control (CAV) or variable air volume control (VAV).	

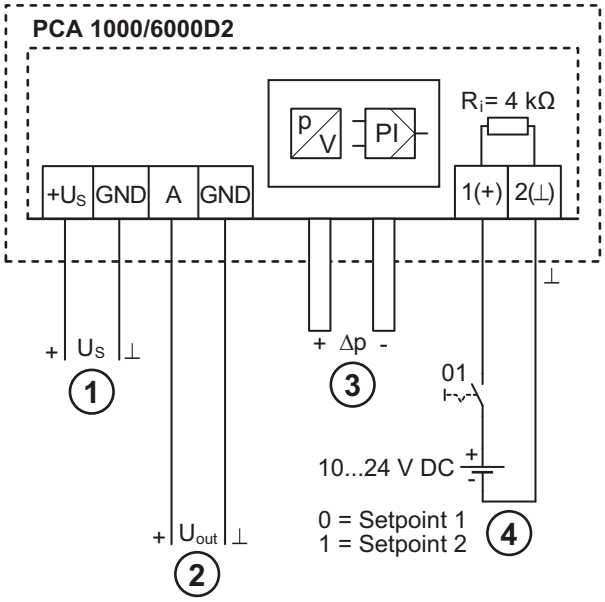

1. Mains supply 10....24 V DC
2. Output 0....10 V
3. Pressure connections
4. Voltage input for switch on Setpoint 1/Setpoint 2

13 Accessory overview

13.1 Accessory overview for TFSR fans

Note:

For more information about accessories, refer to www.systemair.com or speak to Systemair technical support.

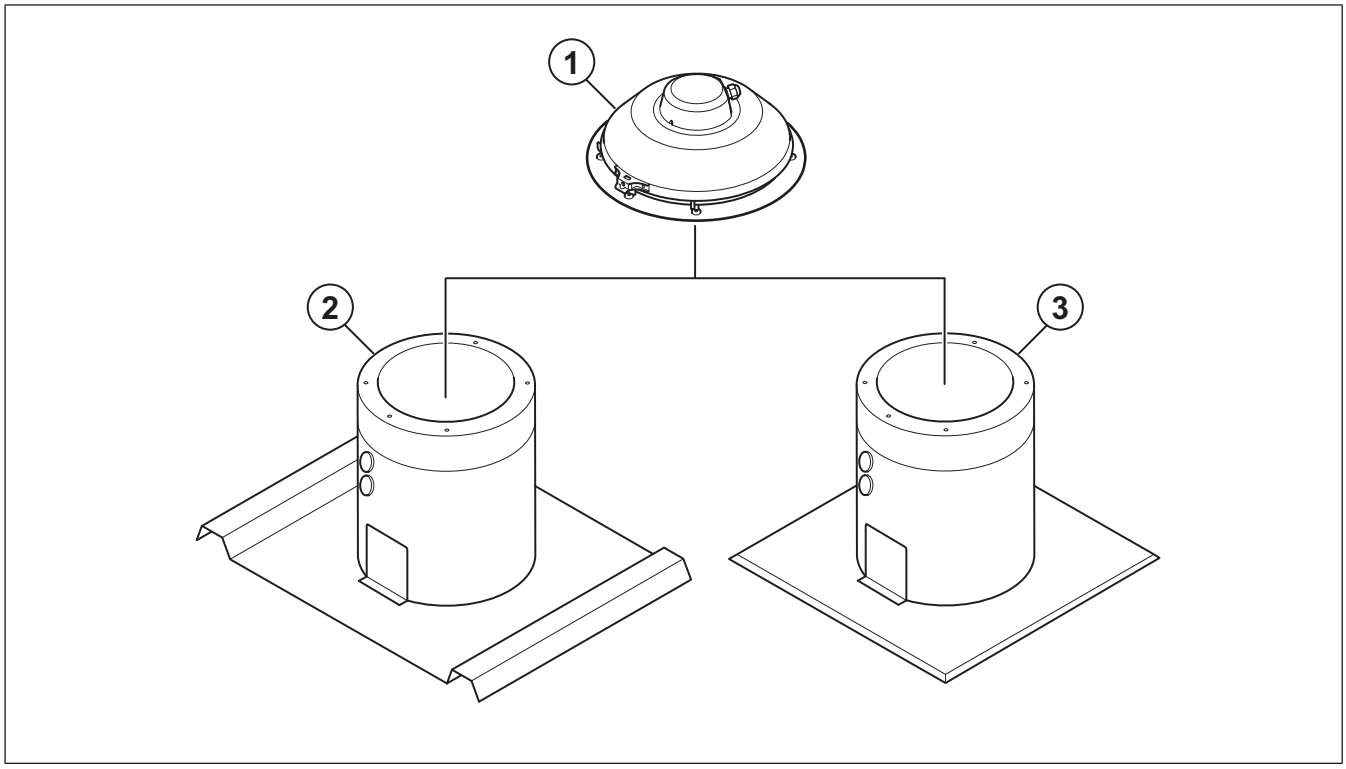

1. Fan
2. TOB: Roof curb with curbed covering plate
3. TOS: Roof curb with flat covering plate

13.2 Accessory overview for TFSK, TOE, TOV and TFE fans

Note:

For more information about accessories, refer to www.systemair.com or speak to Systemair technical support.

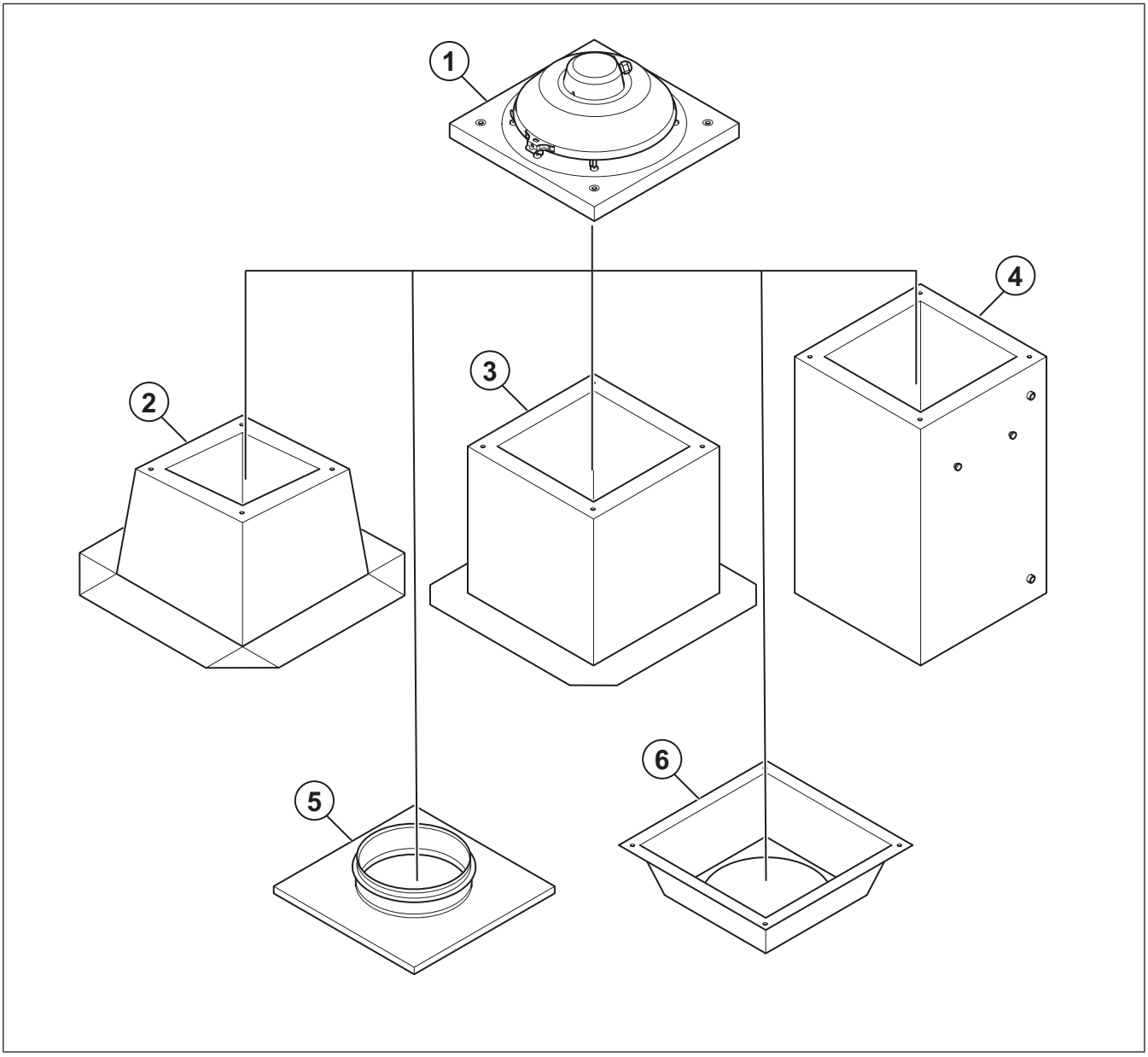

1. Fan
2. FDS: Flat roof socket
3. FDS-L: Flat roof socket (large)
4. TG: Roof curb
5. STG: Connection plate – base plate
6. ASK: Inflow box SSD

14 EU Declaration of Conformity

We, the manufacturer

Manufacturer	Systemair Production AB
Address	Industrivägen 3 739 30 Skinnskatteberg Sweden

declare under our sole responsibility that the products

Machine	Roof fan
Type/Model	TFSR, TFSK, TOE, TOV, TFE

fulfils the relevant provisions of following directives and standards

Machinery Directive 2006/42/EC

EN ISO 12100:2010

Safety of machinery – General principles for design - Risk assessment and risk reduction

EN ISO 13857:2019

Safety of machinery – Safety distances to prevent hazard zones being reached by upper or lower limbs

EN 60204-1:2018

Safety of machinery – Electrical equipment of machines – Part 1: General requirements

EN 60335-1:2012

Household and similar electrical appliances – Safety Part 1: General requirements.

EN 60 335-2-80:2003

Household and similar electrical appliances – Safety – Part 2-80: Particular requirements for fans.

EN 50106:2008

Safety of household and similar appliances – Particular rules for routine tests referring to appliances under the scope of EN 60 335-1.

EN 60529:2014

Degrees of protection provided by enclosures (IP Code).

Directive electromagnetic compatibility (EMC) 2014/30/EU

EN 62233:2008

Measurement methods for electromagnetic fields of household appliances and similar apparatus with regard to human exposure

EN 61000-6-2:2005

Electromagnetic compatibility (EMC) – Part 6-2: Generic standards – Immunity for industrial environments.

EN 61000-6-3:2007

Electromagnetic compatibility (EMC) – part 6-3: Generic standards – emission standard for residential, commercial and light-industrial environments.

RoHS Directive 2011/65/EU and amendment (EU) 2015/863

EN IEC 63000:2018

Technical documentation for the assessment of electrical and electronic products with respect to the restriction of hazardous substances

Ecodesign Directive 2009/125/EC

2024/1834 Requirements for fans between 125W and 500kW

327/2011 Requirements for fans above 125W

1253/2014 Requirements for ventilation units above 30W

1254/2014 Requirements for energy labelling of residential ventilation units

EN ISO 5801:2017

Fans – Performance testing using standardized airways.

EN 13142:2021

Ventilation for buildings – Components/Products for residential ventilation – required and optional performance characteristics.

Persons authorized to compile the technical file:

Tomas Angelhag

Head Of Engineering

This declaration relates exclusively to the machinery in the state in which it was placed on the market and excludes components which are added or operations carried out subsequently by the final user.

Skinnskatteberg, Sweden 2026-09-09

Sofia Rask

Managing Director

15 UK Declaration of Conformity

We, the manufacturer

Manufacturer	Systemair Production AB
Address	Industrivägen 3 SE-73930 Skinskatteberg Sweden

declare under our sole responsibility that the products

Machine	Roof fan
Type/Model	TFSR, TFSK, TOE, TOV, TFE

fulfils the relevant provisions of following directives and standards

Supply of Machinery (Safety) Regulations 2008

EN ISO 12100:2010

Safety of machinery – General principles for design - Risk assessment and risk reduction

EN ISO 13857:2019

Safety of machinery – Safety distances to prevent hazard zones being reached by upper or lower limbs

EN 60204-1:2018

Safety of machinery – Electrical equipment of machines – Part 1: General requirements

EN 60335-1:2012

Household and similar electrical appliances – Safety Part 1: General requirements.

EN 60 335-2-80:2003

Household and similar electrical appliances – Safety – Part 2-80: Particular requirements for fans.

EN 50106:2008

Safety of household and similar appliances – Particular rules for routine tests referring to appliances under the scope of EN 60 335-1.

EN 60529:2014

Degrees of protection provided by enclosures (IP Code).

Electromagnetic Compatibility Regulations 2016

EN 62233:2008

Measurement methods for electromagnetic fields of household appliances and similar apparatus with regard to human exposure

EN 61000-6-2:2005

Electromagnetic compatibility (EMC) – Part 6-2: Generic standards – Immunity for industrial environments.

EN 61000-6-3:2007

Electromagnetic compatibility (EMC) – part 6-3: Generic standards – emission standard for residential, commercial and light-industrial environments.

The Restriction of the Use of Certain Hazardous Substances in Electrical and Electronic Equipment Regulations 2012

EN IEC 63000:2018

Technical documentation for the assessment of electrical and electronic products with respect to the restriction of hazardous substances

The Ecodesign for Energy-Related Products and Energy Information (Amendment) (EU Exit) Regulations 2019

2024/1834 Requirements for fans between 125W and 500kW

327/2011 Requirements for fans above 125W

1253/2014 Requirements for ventilation units above 30W

1254/2014 Requirements for energy labelling of residential ventilation units

EN ISO 5801:2017

Fans – Performance testing using standardized airways.

EN 13142:2021

Ventilation for buildings – Components/Products for residential ventilation – required and optional performance characteristics.

Persons authorized to compile the technical file:

Tomas Angelhag

Head Of Engineering

This declaration relates exclusively to the machinery in the state in which it was placed on the market and excludes components which are added or operations carried out subsequently by the final user.

Skinnskatteberg, Sweden 2026-09-09

Sofia Rask

Managing Director

Systemair Production AB

Industrivägen 3

SE-739 30 Skinnskatteberg

+46 222 440 00

mailbox@systemair.com

www.systemair.com

© Copyright Systemair AB
All rights reserved
EOE

Systemair AB reserves the rights to alter their products without notice. This also applies to products already ordered, as long as it does not affect the previously agreed specifications.

Document in original language

2026-09-09

483585 - 004