Installation, Operation and Maintenance Instructions EN

K Circular duct fan AC/EC
KV Circular duct fan for wall AC/EC
Prio Circular duct fan AC/EC

Table of contents

1 Introduction 1
1.1 Product description 1
1.2 Intended use 1
1.3 Document description 1
1.4 Product overview K fan and KV fan 1
1.5 Product overview prio fan 2
1.6 Name plate 2
1.6.1 Type designation 2
1.7 Product liability 3
2 Safety 3
2.1 Safety definitions 3
2.2 Safety instructions 3
2.3 Personal protective equipment 4
3 Transportation and storage 4
4 Installation 5
4.1 To do before the installation of the product 5
4.2 To install the K fans 5
4.2.1 To install the mounting bracket for K fans 5
4.3 To install the KV fans 6
4.4 To install the prio fans 6
4.5 To connect the ducts to the product 6
5 Electrical connection 7
5.1 To do before the electrical connection 7
5.2 To connect the product to the power supply 7
5.3 Speed controller for EC motors 7
5.4 Motor protection for EC motors 7
5.5 Speed controller for AC motors 7
5.6 To install motor protection for AC motors 8
6 Commissioning 8
6.1 To do before the commissioning 8
6.2 To do the commissioning 8
7 Operation 9
7.1 To start a product with an EC motor 9
7.2 To start a product with an AC motor 9
7.3 To stop the product 9
7.3.1 To stop the product in an emergency 9
8 Maintenance 10
8.1 Maintenance schedule 10
8.2 To clean the product 10
8.3 Spare parts 10
9 Troubleshooting 11
10 Disposal 13
10.1 To disassemble and discard the parts of the product 13
11 Warranty 13
12 Technical data 14
12.1 Technical data overview 14
12.2 Product dimensions 14
12.2.1 Product dimensions for K fans 14
12.2.2 Product dimensions for KV fans 15
12.2.3 Product dimensions for prio fans 16
12.3 Wiring diagrams 18
12.3.1 Wiring diagrams for AC fans 19
12.3.2 Wiring diagrams for EC fans 19
12.3.3 Wiring diagrams for speed controller for AC motors 21
12.3.4 Wiring diagrams for speed controllers for EC motors 25
12.3.5 Wiring diagrams for ON/OFF controls for EC motors 27
12.3.6 Wiring diagrams for demand control for EC motors 27
13 Accessory overview 29
14 EU Declaration of Conformity 30
15 UK Declaration of Conformity 31

1 Introduction

1.1 Product description

This product is a circular duct fan with an airtight casing made from sheet metal.

The product is not supplied with a safety switch, external speed control, or FK fast clamps, these parts are available and recommended as accessories.

1.2 Intended use

The product is used for transportation of clean or contaminated air. Refer to www.systemair.com for the maximum temperature of transported air.

The product is intended for installation in indoor environments and wet rooms. It is also possible to install the product in outdoor environments with weather protection. The product is applicable for ambient temperatures of between -25 ° C and +70 °C.

K fans, KV fans and prio fans are made for installation in circular duct systems.

The product is not applicable for transportation of air that contains explosive, flammable or aggressive media. The product is not applicable for locations where there is a risk of explosion.

1.3 Document description

This document contains instructions for installation, operation and maintenance of the product. The procedures must be done by approved personnel only.

Speak to Systemair for more information on how to install the product in different installation locations.

1.4 Product overview K fan and KV fan

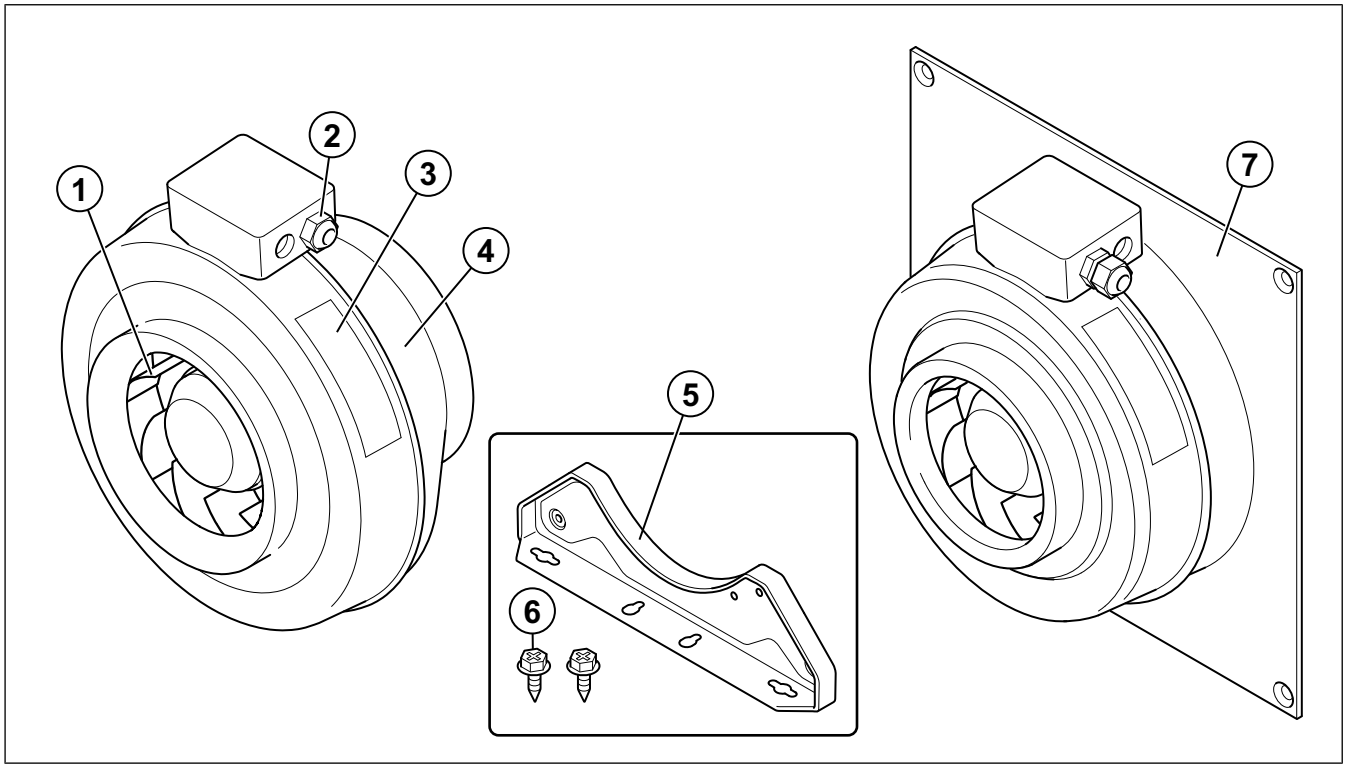

1. Fan impeller
2. Connection box
3. Name plate
4. Casing
5. Mounting bracket (for K fans)
6. Self-drilling screws (BSS 4,2 x 13)
7. Wall mounting plate (for KV fans)

1.5 Product overview prio fan

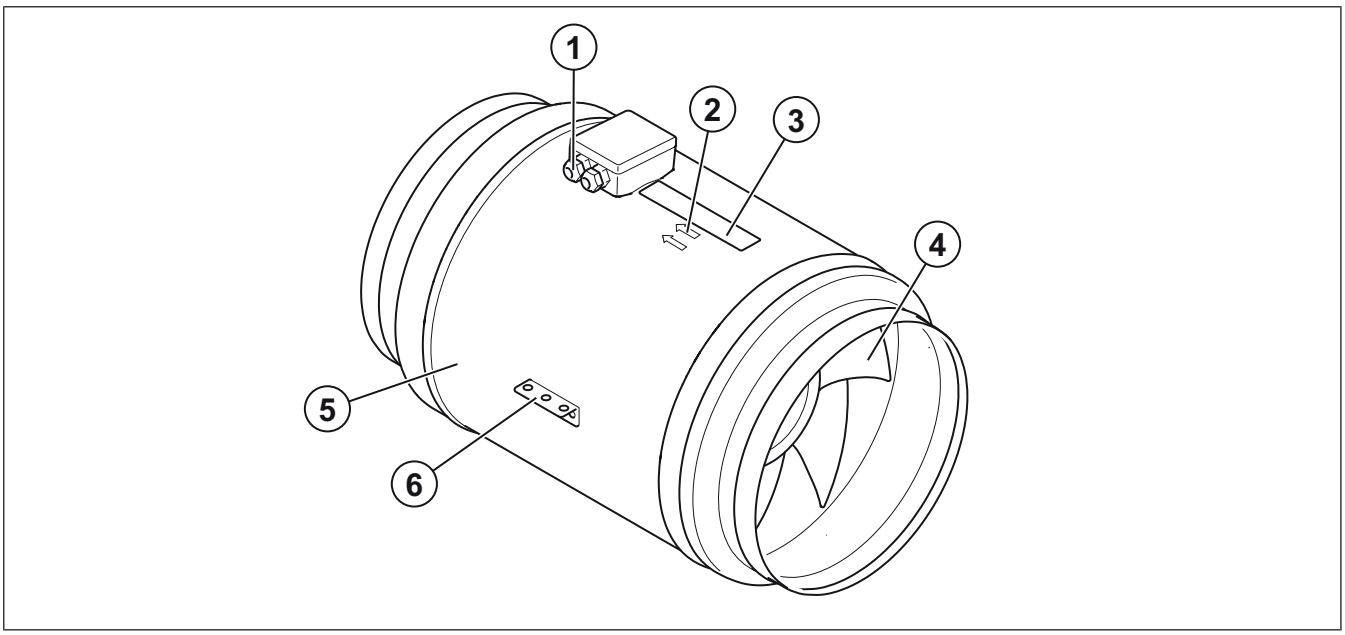

1. Connection box
2. Airflow direction arrows
3. Name plate
4. Fan impeller
5. Casing
6. Mounting bracket

1.6 Name plate

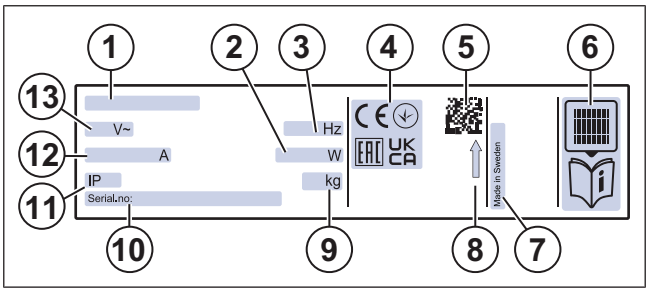

1. Type designation: Product name, dimension and motor type. Refer to 1.6.1 Type designation.
2. Input power, W
3. Frequency, Hz
4. Certifications
5. Scannable code for more information about the product[1]
6. Scannable code to go to Systemair customer portal for translated documents and spare parts[1]
7. Country of production
8. The position for the airflow direction arrow
9. Weight, kg
10. Serial number: part number/production number/production date
11. IP class, enclosure class
12. Current, A
13. Voltage, V

Note:

The data on the name plate applies to “standard air” that is specified in the standard ISO5801.

1.6.1 Type designation

Product name	K	KV	prio
Dimension	100	100	315
	125	125	355
	150	150	400
	160	160	450
	200	200	500
	250	250	
	315	315	
Motor type	EC: Electronically commutated, 1–phase, 230 V	EC: Electronically commutated, 1–phase, 230 V	EC: Electronically commutated, 1–phase, 230 V
	AC, 1–phase, 230 V	AC, 1–phase, 230 V	EC: Electronically commutated, 3–phase, 400 V
			AC, 1–phase, 230 V
			AC, 3–phase, 400 V

1. Use a mobile device to scan the code

1.7 Product liability

Systemair is not liable for damages that the product causes in these conditions:

- The product is incorrectly installed, operated or maintained.
- The product is repaired with parts that are not original spare parts from Systemair.
- The product is used together with accessories that are not original accessories from Systemair.
- The product is used without motor protection.

2 Safety

2.1 Safety definitions

Warnings, cautions and notes are used to point out especially important parts of the manual.

Warning

If you do not obey these instructions, there is a risk of fatal injury or injury.

Caution

If you do not obey these instructions, there is a risk of damage to the product, other materials or the adjacent area.

Note:

Information that is necessary in a given situation.

2.2 Safety instructions

Warning

Read the warning instructions that follow before you do work on the product.

- Read this manual and make sure that you understand the instructions before you do work on the product.
- Obey local conditions and laws.
- The ventilation contractor and the operator are responsible for correct installation and intended use.
- Keep this manual at the location of the product.
- Do not install or operate the product if it is defective.
- Do not remove or disconnect safety devices.
- Make sure that you can read all warning signs and labels on the product when it is installed. Replace labels that have damage.
- Only permit approved personnel to work on the product and to be in the adjacent area during all work on the product.
- Make sure that you know how to stop the product quickly in an emergency.
- Use applicable safety devices and personal protective equipment during all work on the product.
- Before you do work on the product, stop the product and wait until the fan impeller stops. Make sure that there is no voltage on the motor terminals.
- If the maintenance is not correctly and regularly done, there is risk of injury and damage to the product.
- Only do the maintenance as given in this manual. Speak to Systemair technical support if other servicing is necessary.
- Always use spare parts from Systemair.
- Sound levels exceeding 70 dB(A) may occur depending on model and size. Visit www.systemair.com for more detailed information about your product.
- The product is not to be used by persons, including children, with reduced physical, sensory or mental

capabilities, or lack of experience and knowledge, unless they have been given supervision or instruction.

- Do not allow children to play with the device.

2.3 Personal protective equipment

Use personal protective equipment during all work on the product.

- Approved eye protection
- Approved protective helmet
- Approved hearing protection
- Approved protective gloves
- Approved protective shoes
- Approved work clothing

3 Transportation and storage

Warning

Make sure that the product does not get damaged or wet during transportation. A damaged or wet product can cause fire or electric shock.

- Before you move the product to the installation location, examine the packaging for damages.
- Do not move the product by the cables, terminal box, fan impeller, protection grille, inlet cone or silencer.
- If lifting equipment is used, make sure that the lifting equipment can hold the weight of the product. Refer to the name plate for information. Do not lift the product by the packaging.

Warning

Do not walk below a lifted product.

- Keep the correct side of the packaging up during transportation. Refer to the arrows on the packaging.
- Load and unload the product carefully.
- Keep the product in a dry and clean location during storage. Make sure that the ambient temperature during storage is between –10 and +30 °C. A stable ambient temperature prevents damage from condensation.
- Keep the product in storage for maximum 1 year.

4 Installation

4.1 To do before the installation of the product

- Make sure that you have the necessary installation accessories:
  - Refer to 13 Accessory overview for an overview of the accessories.
  - If you install the product outdoors, it is necessary to install a weather protection roof.
  - To decrease vibrations transmitted from the product to the duct system, Systemair recommends to install vibration dampers, fast clamps or flexible connections.
  - If you install the product with free suction or free discharge, it is necessary to install a protection grille. Make sure that the safety distance agrees with the standard ISO 12499.
- Use installation material with fire resistance rating for the installation location.
- Examine the packaging for transportation damage and remove the packaging from the product carefully.
- Examine the product and all components for damage.
- Make sure that the motor effect and the fan performance agrees with the expectations at the installation location.
- Make sure that the information on the name plate and the motor name plate agrees with the operation conditions.
- Install the product in a location where there is space for commissioning, troubleshooting and maintenance.
- Make sure that the installation location is clean and dry, for full safety during electrical work.
- Make sure that the installation surface has sufficient capacity to hold the weight of the product.
- Refer to the airflow direction arrows on the name plate or on the product to install the product in the correct position.
- Make sure that all cable glands are tight against the cables to prevent leaks.

4.2 To install the K fans

The product can be installed in any position, on wall or ceiling using the mounting bracket which is included at delivery. Refer to 4.2.1 To install the mounting bracket for K fans for K fans. The product can also be installed in the ceiling using pendulum bars or wires. Pendulum bars, wires and nuts are not supplied by Systemair.

1. Install the mounting bracket or the pendulum bars to the product casing. Refer to 4.2.1 To install the mounting bracket for K fans.
2. Attach the product to the wall or the ceiling with the 2 supplied screws.

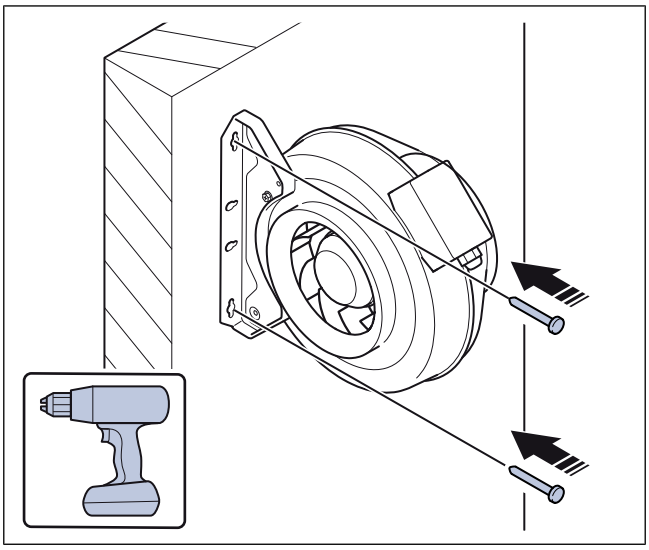

4.2.1 To install the mounting bracket for K fans

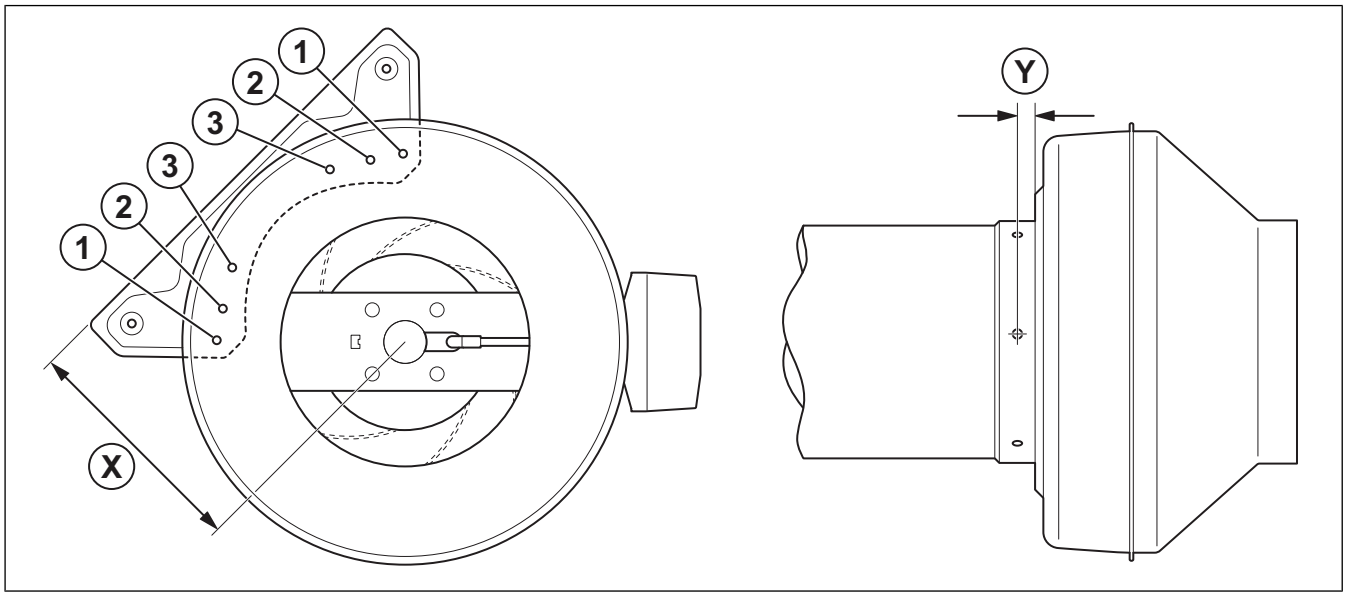

Product type	Screw	X (mm)	Y (mm)
K 100 M	3	112.5	
K 125 M	3	112.5	
K 100/125 XL	1	124.5	
K 150/160 M	2	148.5	
K 150/160 XL	1 + 3	174.5	
K 200/250 M	1 + 2	183.5	
K 200/250 L	1 + 2	183.5	
K 315 M/L	1 + 2	222	Min 15
K 100 EC	1	124.5	
K 125 EC	1	124.5	
K 150 EC	2	148.5	
K 160 EC	2	148.5	
K 200 EC	1 + 2	183.5	
K 250 EC	1 + 2	183.5	
K 315 EC	1 + 2	222	

4.3 To install the KV fans

1 Attach the product to the wall or the ceiling with the 4 supplied screws.

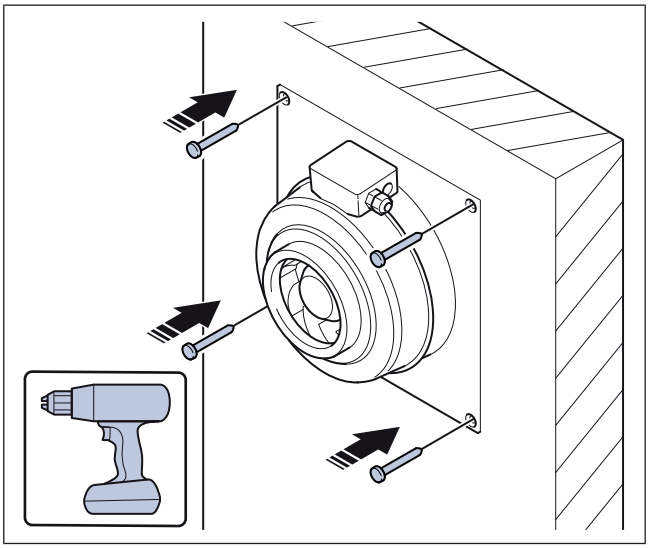

4.4 To install the prio fans

1 Install pendulum bars or wires in the ceiling. Pendulum bars, wires and nuts are not supplied by Systemair.

2 Attach the pendulum bars or wires to the mounting brackets on the product casing.

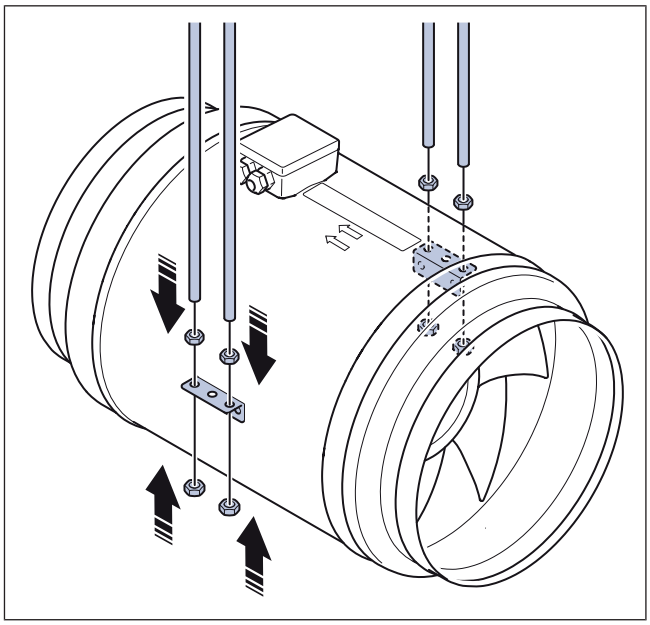

4.5 To connect the ducts to the product

1 Put the ducts on each side of the product.

2 Use the fast clamps (A) to attach the duct to the product. Systemair recommends to use FK fast clamps to attach the duct to the product. The FK fast clamps are available as an accessory.

Refer to13 Accessory overview .

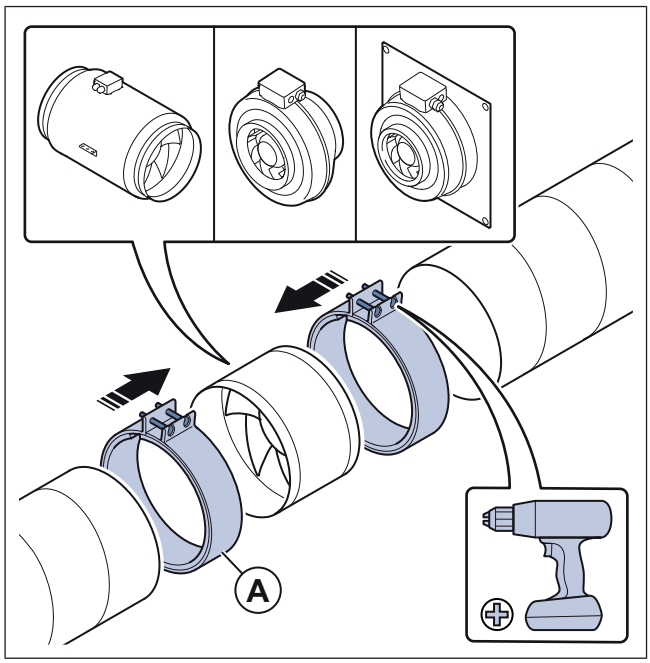

3 Tighten the fast clamps (A) around the duct and the product with the supplied screws. Make sure that there is a distance between the duct and the product to decrease vibrations transmitted from the product to the duct system.

4 If you install the product near a duct bend, do these steps to prevent vibrations, unwanted noise and decreased air pressure:

a. Measure the distance (A) between the product and the duct bend.

b. Make sure that the distance (A) is a minimum of 2.5 x the diameter (B) of the duct system. For circular ducts, (B) is the nominal diameter. For rectangular ducts, (B) is the hydraulic diameter.

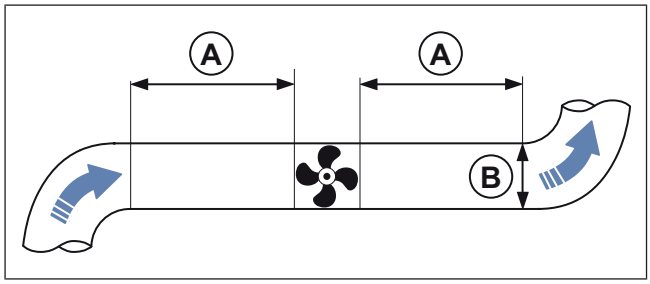

5 Electrical connection

5.1 To do before the electrical connection

- Make sure that the electrical connection agrees with the product specification on the motor name plate.
- Make sure that the environment for electrical connection is clean and dry.
- Make sure that the wiring diagram that is included with the supply of the product agrees with the terminals in the connection box.

5.2 To connect the product to the power supply

- Complete the electrical connection for the motor. Refer to the motor wiring diagram that is included with the product.
- Make sure that the cross section of the protective earthing is equal to or larger than the cross section of the phase conductor.
- Install a circuit breaker in the permanent electrical installation, with a contact opening of a minimum 3 mm at each pole.
- If a residual current device (RCD) is installed, make sure that it is an all-current sensitive RCD. Consider if the product has a frequency converter, uninterruptible power supply (UPS), or an EC motor. EC motors have a leakage current to earth that is <=3.5 mA.

5.3 Speed controller for EC motors

- EC motors are controlled through a stepless 0–10 V signal.
- Do not control the fan speed by adjusting the power supply to the fan.
- Refer to 12.3 Wiring diagrams and the instruction manual for the external speed controller.

5.4 Motor protection for EC motors

EC motors have an integrated motor protection. Reset the motor protection by disconnecting the fan from power supply for 60 seconds.

5.5 Speed controller for AC motors

Note:

The speed controller alternatives are different for different motor types. Make sure that your motor is compatible with the speed controller type before you use it.

The speed can be controlled by voltage reduction using a transformer. It is also possible to control the fan speed with frequency converter if the installed frequency converter has built in all-pole sine filter and shielded cables are not needed.

5.6 To install motor protection for AC motors

- If the product has an built in motor protection, reset by disconnecting the product from power for 60 seconds.
- If the motor has temperature monitors such as thermal contacts (TK) or thermistors lead out into the terminal box, these must always be connected in the control circuit using appropriate motor protection.
- Make sure that an overheated motor cannot start again automatically when it becomes cool.
- Install the motor cables and the temperature monitor apart.
- If the motor does not have temperature monitors, install a motor protection switch.

6 Commissioning

Caution

- If strong vibrations occur during commissioning, immediately increase or decrease the fan speed until the vibrations are decreased. Continuous strong vibrations can cause damage to components.
- Do not increase the fan speed to a higher rpm value than the maximum value that is given on the name plate.

The commissioning report is found at www.systemair.com.

6.1 To do before the commissioning

- Make sure that the installation and electrical connection are correctly done.
- Visually examine the product and accessories for damage.
- Make sure that the safety devices are correctly installed.
- Make sure that there are no blockages in the air inlet and the air outlet.
- Make sure that installation material and unwanted objects are removed from the product and the ducts.

6.2 To do the commissioning

1. Set the installed safety switch in the OFF position.
2. If it is possible to get access to the fan impeller, do the steps that follows:
   a. If it is necessary, remove parts of the installation.
   b. Turn the fan impeller by hand and make sure that it turn easily.
   c. Record the result in the commissioning report.
3. Make sure to turn the product in a direction that agrees with the related arrow on the product.
   a. Record the result in the commissioning report.
4. If you removed parts of the installation to get access to the fan impeller, install the removed parts again.
5. Set the installed safety switch in the ON position.
6. Start the product.
7. Set the minimum operation speed.
8. Increase the operation speed gradually to the maximum operation speed.
   a. Examine the vibrations in the casing and the bearing areas at all speed levels.
   b. Make sure that the vibrations agree with the specifications in ISO 14694.
   c. Make sure that none of the speed levels cause unwanted noise in the product.
   d. Record the result in the commissioning report.
9. Record the necessary data in the commissioning report.

7 Operation

Caution

EC motors must be set to ON/OFF via the control input. To stop the product via mains supply decreases the life time of the motor. Systemair recommends to install external speed controller for easy access to control the input signal.

7.1 To start a product with an EC motor

1. Make sure that the 0–10 V signal is set to “0” with the speed controller.
2. Set the installed safety switch in the ON position and wait 5 seconds.
3. Adjust the fan speed with the 0–10 V signal speed controller. If an external speed controller is not installed, adjust the fan speed directly with the integrated potentiometer.

7.2 To start a product with an AC motor

1. Set the installed safety switch in the ON position.
2. Install the external speed controller. Refer to the instruction manual for the installed speed controller.

7.3 To stop the product

1. Set the installed speed controller in the OFF position. Refer to the instruction manual for the installed speed controller.
2. Set the installed safety switch in the OFF position.

7.3.1 To stop the product in an emergency

- Set the installed safety switch in the OFF position.

8 Maintenance

Warning

Set the installed safety switch in the OFF position before you do the maintenance unless the instructions tell you differently. Make sure that the safety switch is not accidentally set in the ON position.

8.1 Maintenance schedule

The intervals are calculated from continuous operation of the product.

Maintenance task	Usual operation conditions		Unusual operation conditions. [1]		
	Each 6 months	Each year	Each 3 months	Each 6 months	Each year
Visually examine the product and its components for damage and corrosion and dirt.		X		X	
Examine the fan impeller for damage and imbalance.		X		X	
Clean the product and the ventilation system.	X		X		
Do a check of all fasteners and make sure that they are fully tightened.		X			X
Make sure that the product and its components are correctly operated.	X			X	
Measure the power consumption and compare the result with the information on the name plate.		X		X	
If vibration dampers are installed, make sure that they operate correctly and examine them for damage and corrosion.		X			X
Make sure that the electrical protective equipment and the mechanical protective equipment operates correctly.		X			X
Make sure that you can read the name plates of the product.		X		X	
Examine all cable connections for damage. Make sure that the cable glands are tight against the cables.		X			X
If flexible connections are installed, examine them for damage.	X			X	

1. The unusual operation conditions are classified as follows: If a stable ambient temperature is higher than 30 °C or lower than -10 °C, if the temperature changes are large or if very contaminated air is transported.

8.2 To clean the product

Caution

- Do not clean the product with a high-pressure washer.
- Do not clean the product with steel brushes or sharp objects.
- Do not bend the fan impeller blades.
- Be careful not to move the balance weights on the fan impeller.

- Remove dirt from the fan and the duct.
- If access to the fan impeller is possible, clean the fan impeller with a moist cloth or soft brush.

8.3 Spare parts

- When you send an order for spare parts, include the serial number of the product. The serial number is found on the name plate.
- For more information about spare parts, contact technical support.
- Always use spare parts from Systemair.
- To find spare parts, refer to the scannable code on the name plate.

9 Troubleshooting

Note:

If you cannot find a solution to your problem in this section, speak to Systemair technical support.

Problem	Cause	Solution
The product does not operate smoothly.	The fan impeller is not correctly balanced.	Speak to Systemair technical support.
	There is dirt on the fan impeller.	Clean the fan impeller carefully. Refer to 8.2 To clean the product.
	The fan impeller has damages or deformations because the transported air contains aggressive media.	Speak to Systemair technical support.
	The fan impeller does not turn in the correct direction.	Make sure that the electrical connection is correctly done.
	The fan impeller has deformations because of too high temperatures.	• Replace the fan impeller. • Make sure that the temperature of the transported air is not higher than the value on the name plate.
	There are unusually strong vibrations in the product or the duct system.	Make sure that the product is correctly installed. Do a check of the duct system.
	The product is operated in a resonant frequency range.	Increase or decrease the fan speed until the product operates smoothly. Refer to 6 Commissioning.
The air output is not sufficient.	The fan impeller does not turn in the correct direction.	Make sure that the electrical connection is correctly done.
	The electrical connection is not correctly done.	Make sure that the electrical connection agrees with the wiring diagrams.
	The air pressure is too low because of incorrect installation.	Do the necessary changes in the duct system and installed components to increase the air pressure. Refer to 6 Commissioning.
	The spring return damper on outdoor or exhaust duct is closed or not fully open.	Adjust the spring return damper.
	There is blockage in the air inlet or the duct system.	Remove the blockage.
	The product is not applicable for the installation location.	Make sure that the product is applicable for the installation location.
	The motor power is decreased because of too high temperature in the motor. **Note:** This is applicable for EC motors only.	• Do a check of the ambient temperature. • Make sure that the space around the motor is sufficient to keep the temperature down.
There is unusual noise when the product starts or operates.	There is strain in the connections of the duct system.	Loosen the connections, align the parts of the duct system correctly and tighten the connections.

Problem	Cause	Solution
Thermal contacts, PTC or resistors are released.	The fan impeller does not turn in the correct direction.	Make sure that the electrical connection is correctly done.
	A phase loss occurred.	If the motor is a 3-phase motor, make sure that no phase is missing. **Note:** This is not applicable for EC motors.
	The motor is overheated.	• Do a check of the motor cooling impeller. • If it is possible, measure the resistance to do a check of the motor winding.
	The capacitor is not connected or not correctly connected. **Note:** This is not applicable for EC motors or 3–phase AC motors.	Connect the capacitor correctly. Refer to the included motor wiring diagram.
	There is blockage in the motor.	Speak to Systemair technical support.
The fan speed does not get the nominal value.	Defective motor winding.	If it is possible, measure the resistance to do a check of the motor winding.
	The speed control is not correctly set.	Set the speed control correctly.
	The fan impeller cannot turn freely because of mechanical blockage.	Remove the blockage.
	Phase loss occurs.	If the motor is a 3-phase motor, make sure that no phase is missing.
The motor does not rotate.	A component in the power supply is defective.	Do a check of the power supply. Replace defective components and connect the power supply again.
	The electrical connection is not correctly done.	Make sure that the electrical connection agrees with the wiring diagrams.
	The motor protection is released because the motor is overheated.	Let the motor become cool. Reset the motor protection. Find the cause of the overheated motor.
	A phase loss occurred.	If the motor is a 3-phase motor, make sure that no phase is missing.
The electronic components or the motor is overheated.	The motor is overloaded or the ambient temperature is too high.	Let the motor become cool. Reset the motor protection. Find the cause of the overheated motor.
	The motor is overloaded.	Make sure that the product is applicable for the installation location.
	The ambient temperature is too high.	Make sure that the product is applicable for the installation location.
	The cooling of the product is not sufficient.	Make sure that the space around the motor is sufficient to keep the temperature down.

10 Disposal

The product follows the WEEE directive. This symbol on the product or the packaging of the product shows that this product is not domestic waste. The product must be recycled at an approved disposal location for electrical and electronic equipment.

10.1 To disassemble and discard the parts of the product

1. Disconnect and disassemble the product in the opposite sequence of electrical connection and installation.
2. Recycle the product parts and the packaging at an applicable disposal location.
3. Obey the local and national requirements for disposal.

11 Warranty

For warranty claims, send a written maintenance plan and the commissioning report to Systemair. The warranty is only applicable for these conditions:

- The product is correctly installed and operated.
- Motor protection is used.
- The instructions in the data sheets are obeyed.
- Maintenance instructions are obeyed.
- The product is operated for a minimum of 1 hour each month.

12 Technical data

12.1 Technical data overview

Max. temperature of transported air, °C	Refer to the data sheet in the online catalogue at www.systemair.com.
Max. ambient temperature, °C	
Sound pressure, dB	
Corrosion class	
IP class	
Voltage, current, frequency, enclosure class, weight	Refer to the name plate. Refer to 1.6 Name plate for more information.
Motor data	Refer to the motor name plate or the technical documentation from the motor manufacturer.

12.2 Product dimensions

Note:

If the unit of measure is not specified, the dimensions are given in millimetres.

Note:

The arrow in the dimension drawing shows the direction of the airflow.

12.2.1 Product dimensions for K fans

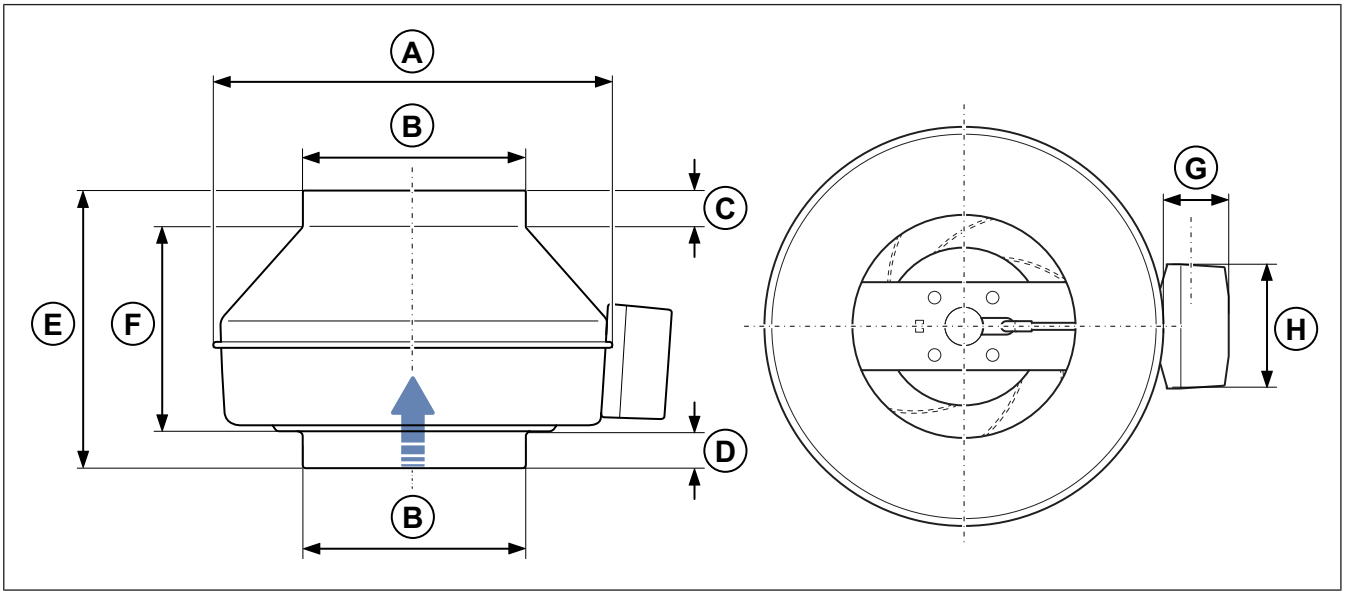

	ØA	ØB	C	D	E	F	G	H
K 100 M sileo	218	99	26	26	218	166	40	88
K 100 XL sileo	246	99	26	26	213	161	40	88
K 125 M sileo	218	124	27	27	196	142	40	88
K 125 XL sileo	246	124	26	26	203	151	40	88
K 150 M sileo	286	149	25	25	202	152	40	88
K 150 XL sileo	336	149	26	29	226	171	40	88
K 160 M sileo	286	159	26	25	198	147	40	88
K 160 XL sileo	336	159	26	29	221	166	40	88

	ØA	ØB	C	D	E	F	G	H
K 200 M sileo	336	199	27	30	205	148	40	88
K 200 L sileo	336	199	27	30	231	174	40	88
K 250 M sileo	336	249	27	30.5	177	119.5	40	88
K 250 L sileo	336	249	27	30.5	202	144.5	40	88
K 315 sileo	408	314	27	32.5	220	160.5	40	88
K 315 M sileo** [1]	408	314	27	32.5	220	160.5	40	88
K 315 L sileo** [1]	408	314	27	38	225	161	40	88

1. ** after the product name means that the product is only for sale outside the EU

	ØA	ØB	C	D	E	F	G	H
K 100 EC sileo	246	99	26	26	213	161	40	88
K 125 EC sileo	246	124	26	26	203	151	40	88
K 150 EC sileo	286	149	25	25	202	152	40	88
K 160 EC sileo	286	159	26	25	198	147	40	88
K 200 EC sileo	336	199	27	30	205	148	40	88
K 250 EC sileo	336	249	27	30.5	202	144.5	40	88
K 315 M EC	408	314	27	32.5	220	160.5	40	88
K 315 L EC	408	314	27	37.5	225	160.5	40	88

12.2.2 Product dimensions for KV fans

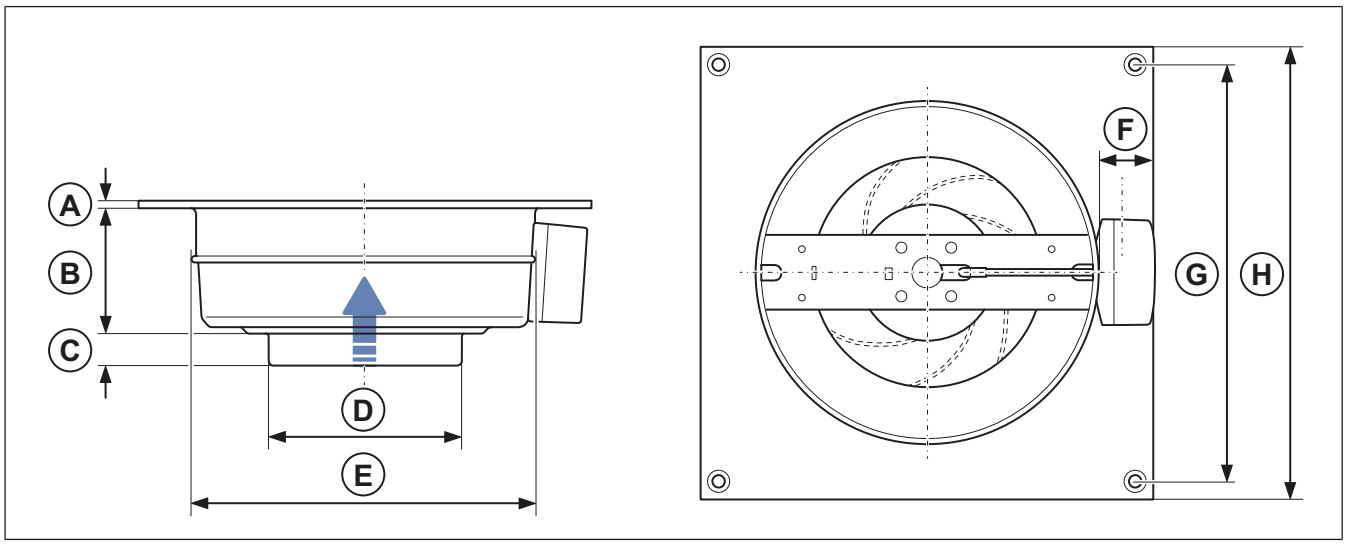

	A	B	C	ØD	ØE	F	G	H
KV 100 M sileo	5	143	26	99	218	40	254	284
KV 100 XL sileo	5	125	26	99	246	40	304	334
KV 125 M sileo	5	131	27	124	218	40	254	284
KV 125 XL sileo	5	127	26	124	246	40	304	334
KV 150 M sileo	5	113	25	149	286	40	344	374
KV 150 XL sileo	5	147	29	149	336	40	394	425
KV 160 M sileo	5	113	25	159	286	40	344	374
KV 160 XL sileo	5	147	29	159	336	40	394	425

	A	B	C	ØD	ØE	F	G	H
KV 200 M sileo	5	134	30	199	336	40	394	425
KV 200 L sileo	5	158	30	199	336	40	394	425
KV 250 M sileo	5	135	30.5	249	336	40	394	425
KV 250 L sileo	5	159	30.5	249	336	40	394	425
KV 315 sileo	5	145	32.5	314	408	40	458	489
KV 315 M sileo** [1]	5	145	32.5	314	408	40	458	489
KV 315 L sileo** [1]	5	145	37.5	314	408	40	458	489

1. ** after the product name means that the product is only for sale outside the EU

	A	B	C	ØD	ØE	F	G	H
KV 100 XL EC sileo	5	125	26	99	246	40	304	334
KV 125 XL EC sileo	5	127	26	124	246	40	304	334
KV 150 EC sileo	5	113	25	149	286	40	344	374
KV 160 EC sileo	5	113	25	159	286	40	344	374
KV 200 EC sileo	5	134	30	199	336	40	394	425
KV 250 EC sileo	5	159	30.5	249	336	40	394	425
KV 315 M EC sileo	5	145	37.5	314	408	40	458	489
KV 315 L EC sileo	5	145	37.5	314	408	40	458	489

12.2.3 Product dimensions for prio fans

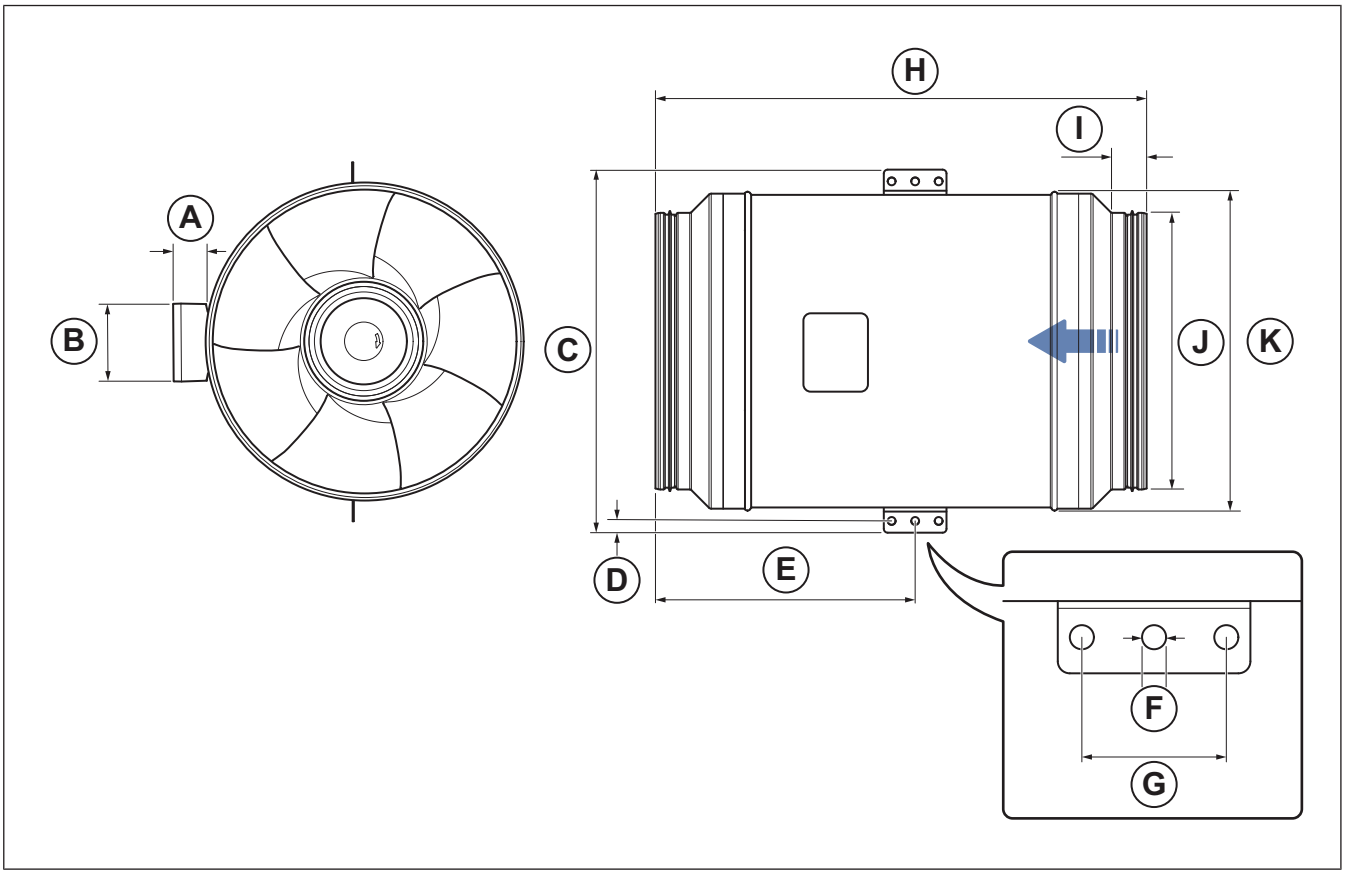

	A	B	C	D	E	ØF	G	H	I	ØJ	ØK
prio 315	45	100	459	15	357	10	60	676	45	313	407
prio 355	45	100	459	15	335	10	60	632	45	353	407

	A	B	ØC	D	E	ØF	G	H	I	ØJ	ØK
prio 355 EC	45	100	459	15	335	10	60	632	45	353	407

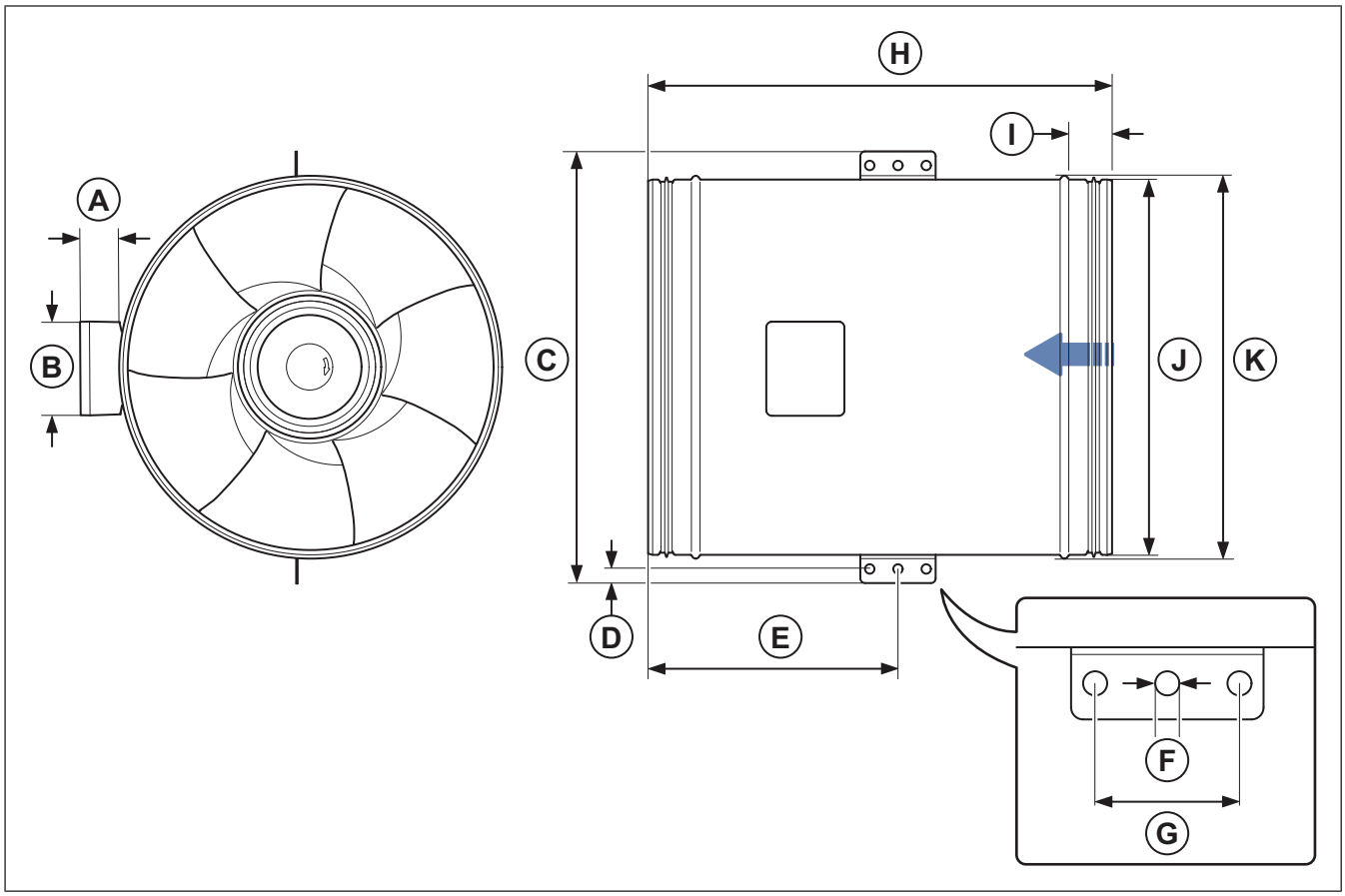

	A	B	C	D	E	ØF	G	H	I	ØJ	ØK
prio 400	45	100	459	15	266	10	60	493	45	399	407

	A	B	ØC	D	E	ØF	G	H	I	ØJ	ØK
prio 315 EC	45	100	375	15	205	10	60	407	45	314	322
prio 400 EC	45	100	459	15	266	10	60	493	45	399	407

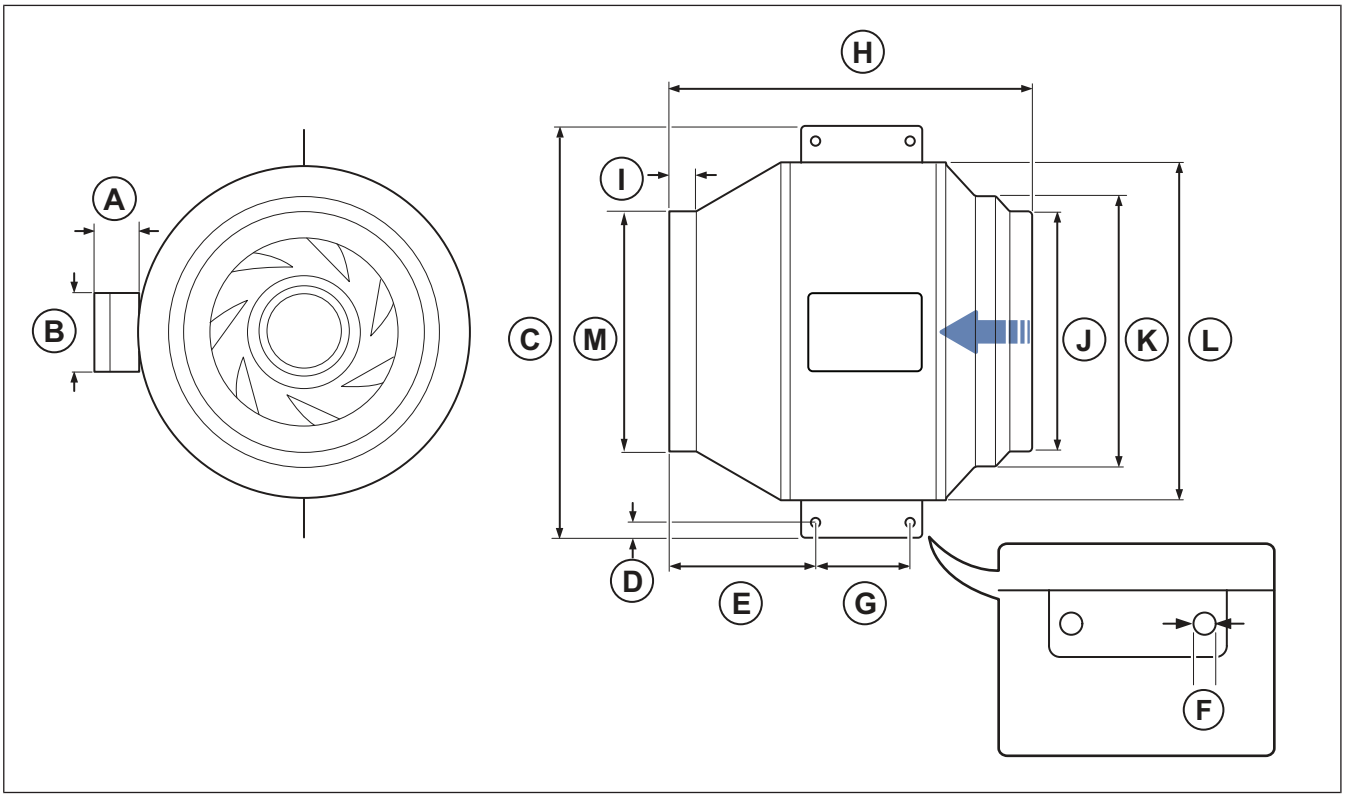

	A	B	C	D	E	ØF	G	H	I	ØJ	ØK	ØL	ØM
prio 450	65	107	812	18,5	315	12	100	686	46	450	500	660	450
prio 500	65	107	812	18,5	270	12	100	643	46	450	500	660	500

	A	B	C	D	E	ØF	G	H	I	ØJ	ØK	ØL	ØM
prio 450 EC	65	107	742	18,5	310	12	100	686	46	450	500	660	450
prio 500 EC	65	107	742	18,5	265	12	100	643	46	450	500	660	500

12.3 Wiring diagrams

Abbreviation in wiring diagram	Cable colour
RD	Red
YE	Yellow
BU	Blue
WH	White
GN	Green
BN	Brown
BK	Black
GR	Grey
GY	Green/Yellow

12.3.1 Wiring diagrams for AC fans

K fans	KV fans	1–phase 230 V
K 100 M sileo	KV 100 M sileo	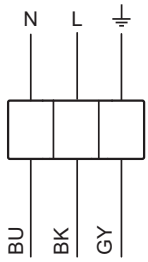
K 125 M sileo	KV 125 M sileo	

K fans	KV fans	1–phase 230 V
K 100 XL sileo	KV 100 XL sileo	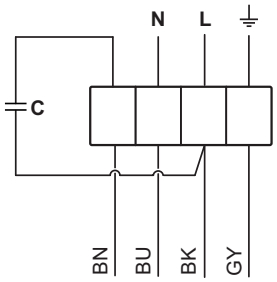
K 125 XL sileo	KV 125 XL sileo	
K 150 M sileo	KV 150 M sileo	
K 150 XL sileo	KV 150 XL sileo	
K 160 M sileo	KV 160 M sileo	
K 160 XL sileo	KV 160 XL sileo	
K 200 L Sileo	KV 200 L sileo	
K 200 M sileo	KV 200 M sileo	
K 250 L Sileo	KV 250 L Sileo	
K 250 M sileo	KV 250 M sileo	
K 315 L	KV 315 L sileo	
K 315 M	KV 315 M sileo	
K 315 sileo	KV 315 sileo	

prio fans	1–phase 230 V
prio 315	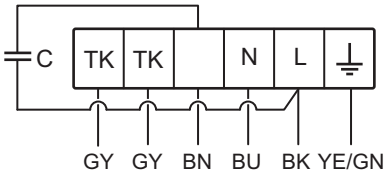
prio 355	
prio 400	

prio fans	3–phase 230 V	3–phase 400 V
prio 450	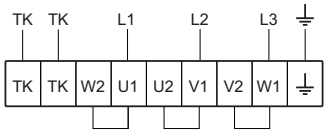	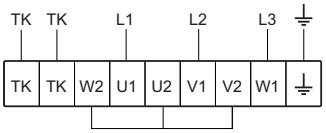
prio 500		

12.3.2 Wiring diagrams for EC fans

Note:

If an internal potentiometer is installed on the terminal block from the factory, remove the internal potentiometer when you use an external speed controller for the EC fan.

K fans	KV fans	1–phase 230 V
K 100 EC sileo	KV 100 EC	
K 125 EC sileo	KV 125 EC	
K 150 EC sileo	KV 150 EC	
K 160 EC sileo	KV 160 EC	
K 200 EC Sileo	KV 200 EC	
K 250 EC sileo	KV 250 EC	
K 315 M EC	KV 315 M EC	
K 315 L EC		

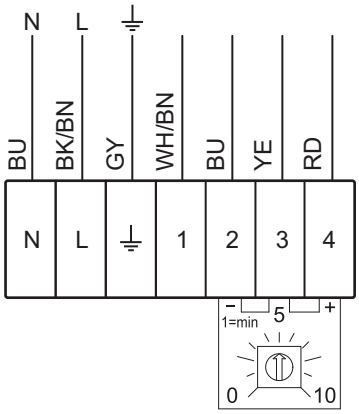

prio fans	1–phase 230 V
prio 315 EC	
prio 355 EC	
prio 400 EC	

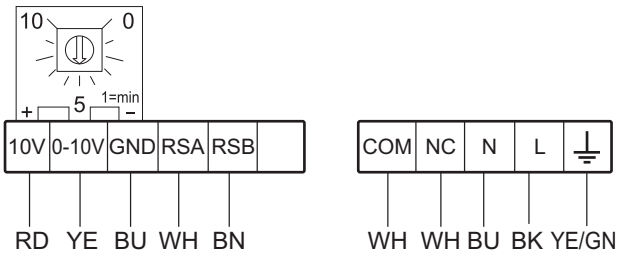

prio fans	3–phase 400 V
prio 400 EC	

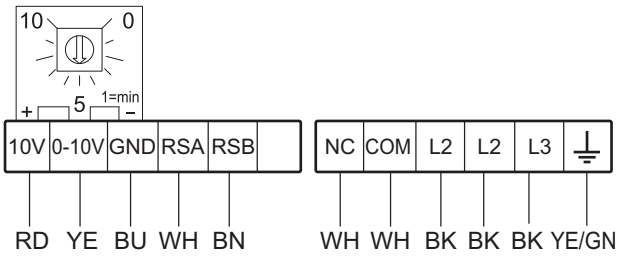

prio fans
prio 450 EC
prio 500 EC

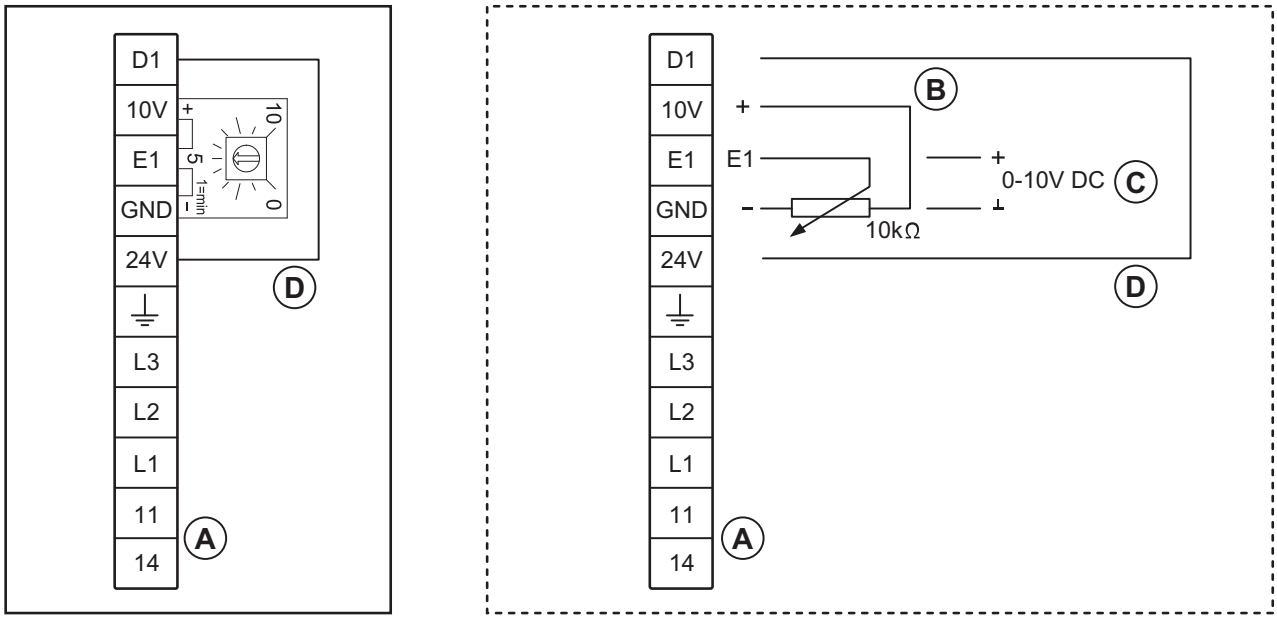

A. 11 & 14 = Alarm

For operation: the relay is energized, connections 11 and 14 are bridged

For fault: the relay is de-energized (diagnostics/faults)

Contact rating maximum AC 250 V 2 A

B. External potentiometer

C. External input DC 0...10 V

D. External ON/OFF control through potential free contact

12.3.3 Wiring diagrams for speed controller for AC motors

Note:

The selection of electrical accessories must be done in line with the technical parameters of the product.

RE	
Manual 5-step transformer.	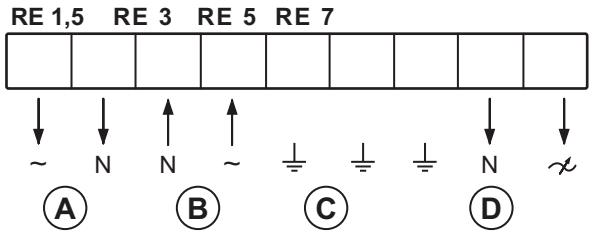

A. Relay connection. There is always 230 V between ~ and N when the transformer knob is in one of the positions 1–5.

B. Mains supply

C. Earth

D. Fan

REE — Thyristor	
REE 1 and REE 2 - Surface mounting or with flush mounting casing included.	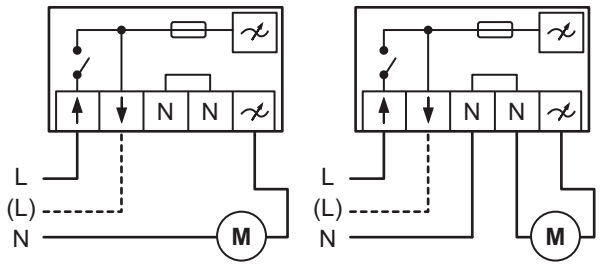
REE 4 - Surface mounting. **Note:** Starting currents must be considered when you select the speed controller type. Products that are used with this speed controller must have a built-in overheating protection and must be designed for thyristor speed control.	

- L: the connection with cutting function on the speed control.
- (L): the connection without cutting function.

REU	
Manual 5-step transformer for high/low speed operation. Used together with a change-over contact, for example a timer or a thermostat.	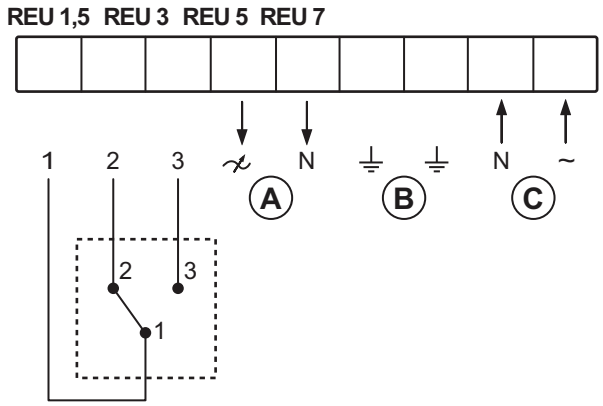

1. External change-over contact
2. Left selector switch
3. Right selector switch

A. Fan
B. Earth
C. Mains supply

RTRE	
Manual 5-step transformer with motor protection.	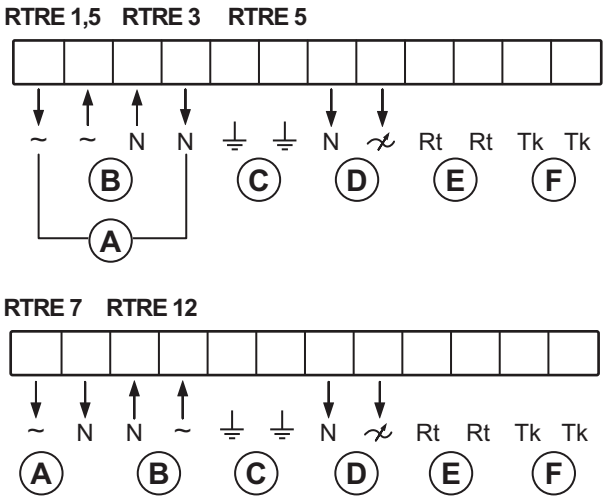

A. Relay connection. There is always 230 V between ~ and N when the transformer knob is in one of the positions 1–5.

B. Mains supply

C. Earth

D. Fan

E. Thermostat

F. Motor protection. If the motor protection is not in use, Tk must be looped together.

FRQ5S-E-6A

Frequency converter with built-in all-pole sine filter and 5-step switch.

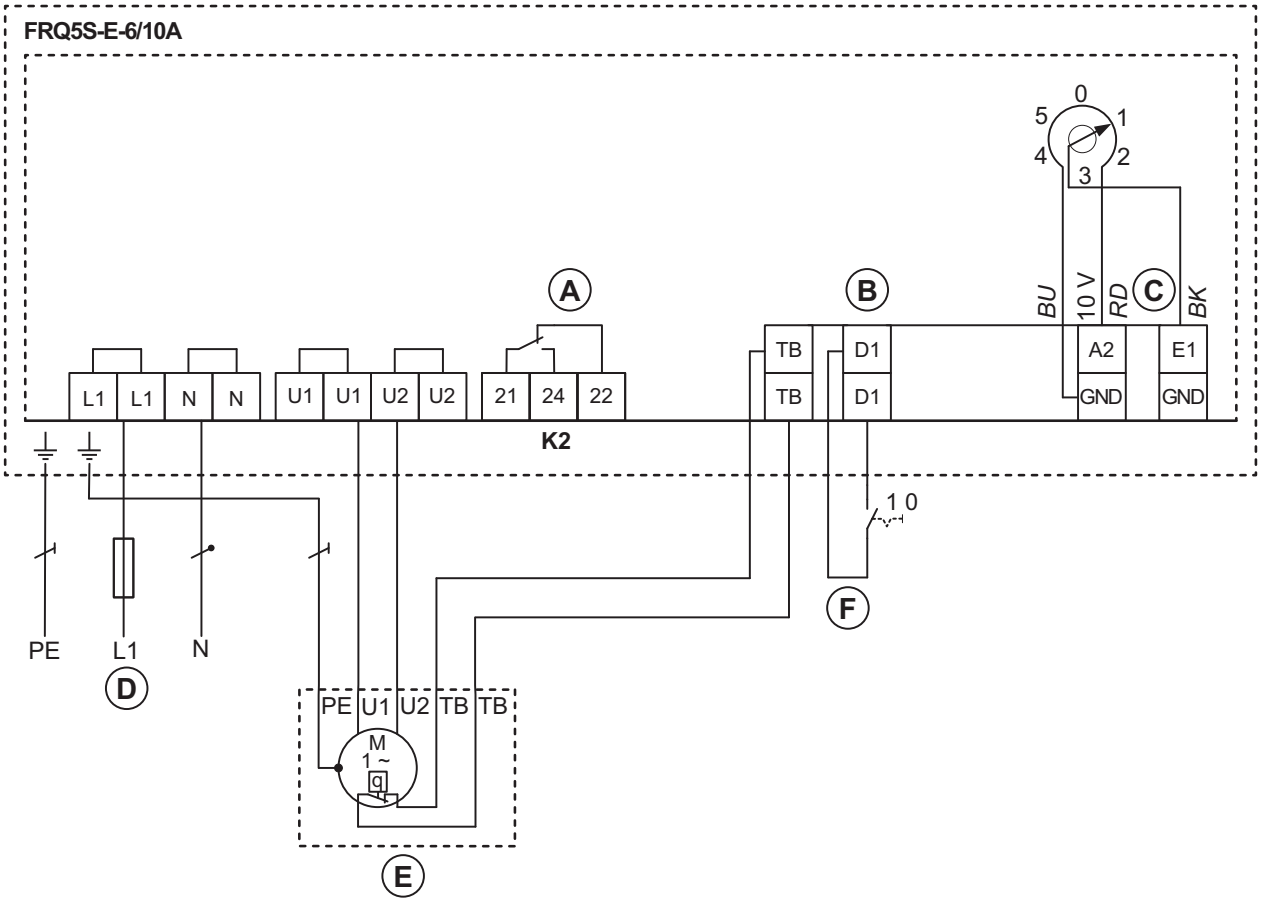

A. Contact rating, maximum AC 250 V/2 A

B. Digital In 1

C. Analog In 1

D. Mains supply, 1–phase 208...277 V, 50/60 Hz

E. Motor with internal thermal contacts

F. OFF/ON

RTRD
A 3-phase transformer that controls the fan speed by altering the supply voltage in five fixed steps. The steps are adjusted by using the control knob on the front of the unit.

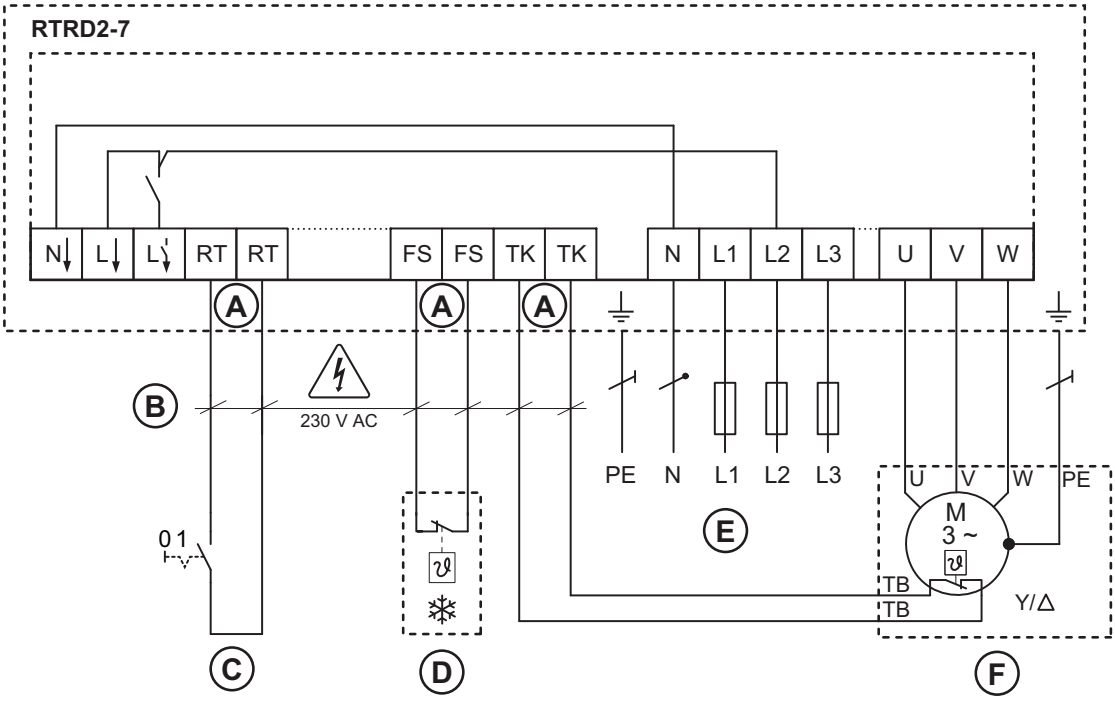

A. If the function is not necessary, the terminals must be bridged

B. Contact rating, 230 V AC/maximum 1 A

C. OFF/ON

D. OFF/ON (only by reset)

E. Mains supply, 3–phase 400 V 50/60 Hz

F. 3–phase motor with internal thermal contacts

RTRDU

Manual 5–step transformer with motor protection — a 3–phase transformer that controls the fan speed by altering the supply voltage in five fixed steps. The steps are adjusted by using the control knob on the front of the unit.

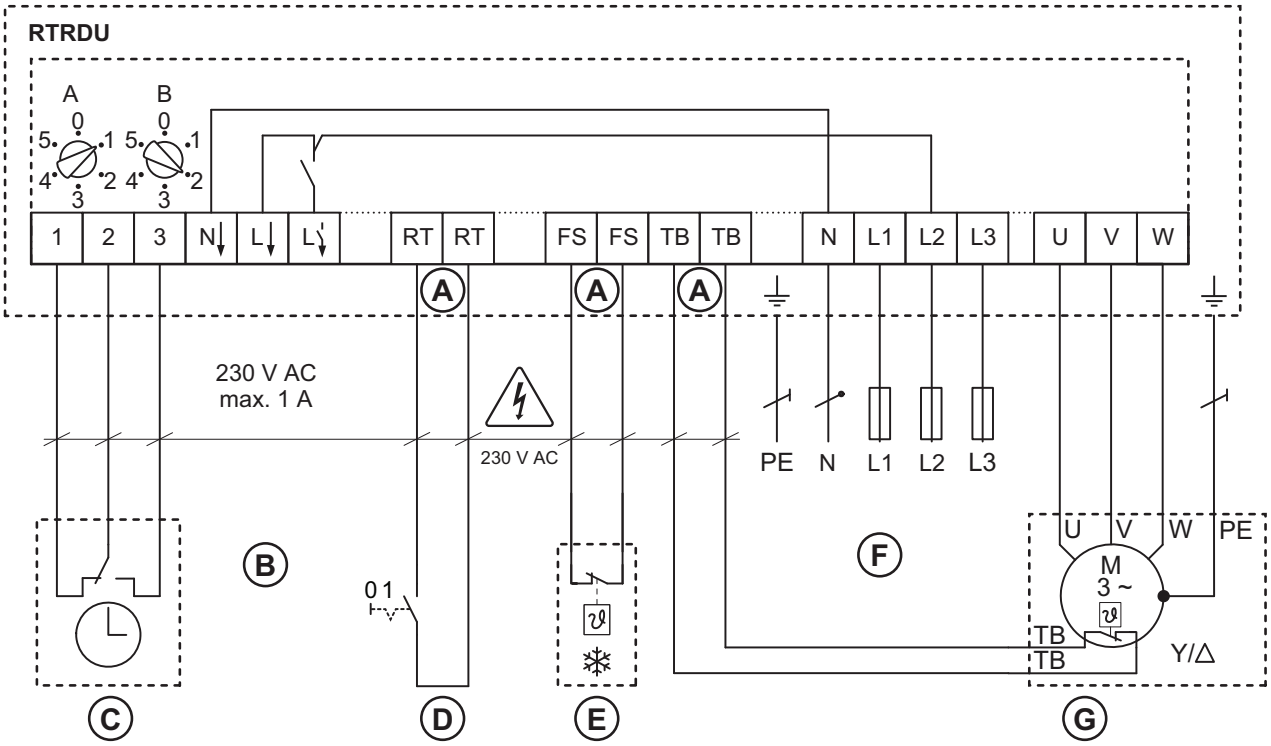

A. If the function is not necessary, the terminals must be bridged

B. Contact rating, 230 V AC/maximum 1 A

C. Time switch

D. OFF/ON

E. OFF/ON (only by reset)

F. Mains supply, 3–phase 400 V 50/60 Hz

G. 3–phase motor with internal thermal contacts

12.3.4 Wiring diagrams for speed controllers for EC motors

Note:

If an internal potentiometer is installed on the terminal block from the factory, remove the internal potentiometer when you use an external speed controller for the EC fan.

MTP 10

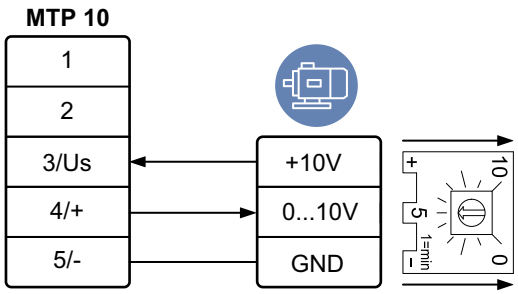

MTP 20

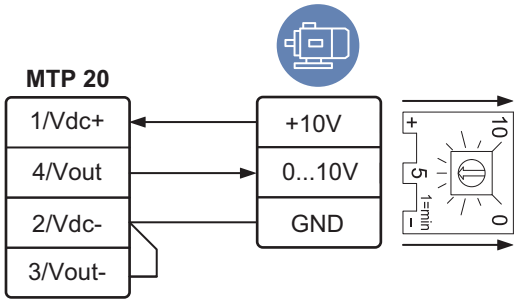

EC-Basic

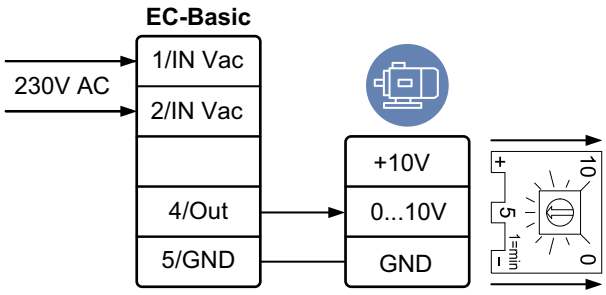

MTV–1/10

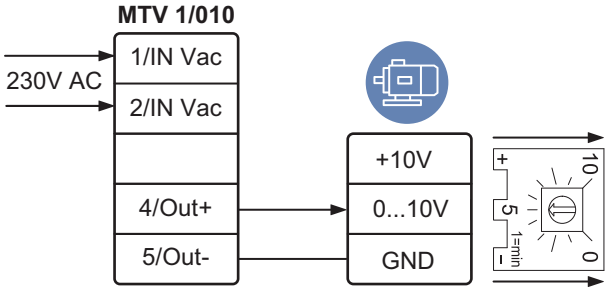

S-5EC/FRQ

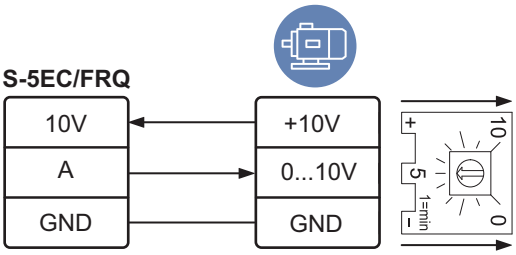

12.3.5 Wiring diagrams for ON/OFF controls for EC motors

CO2RT-R(-D)

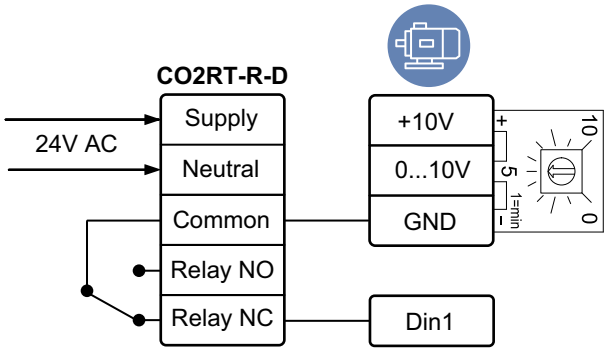

IR24–P

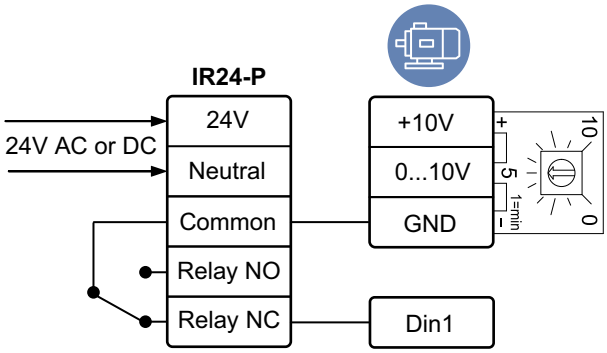

12.3.6 Wiring diagrams for demand control for EC motors

EC Basic	
EC Basic-T for temperature control	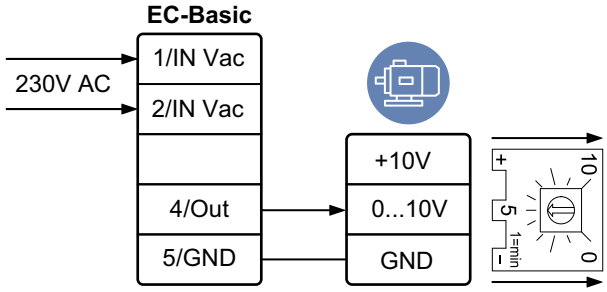
EC Basic-CO2/T for temperature and CO_2 control	
EC Basic-H for humidity control	

EC Basic-U	
EC Basic-U for universal 0-10 V control	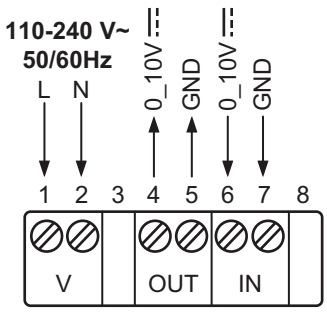

MM6-24/D output signal selector	
Compares signals from connected inputs and transfers the signal to the control output.	

1	Input 1 0...10 V
2	Input 2 0...10 V
3	Input 3 0...10 V
4	Input 4 0...10 V
5	Input 5 0...10 V
6	Input 6 0...10 V

7	System neutral	Mains supply
8	24 V AC	
9	Signal neutral	
10	Signal neutral	
11	Output minimum 0...10V	
12	Output maximum 0...10V	

PCA 1000D2 Pressure controller	
For constant air volume control (CAV) or variable air volume control (VAV).	

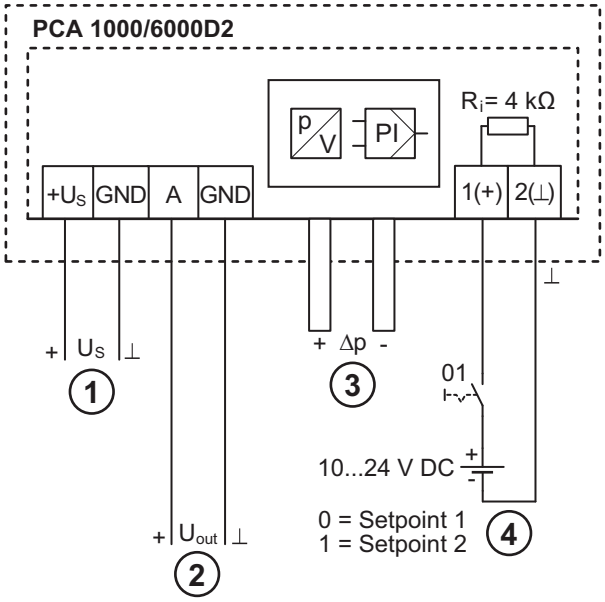

1. Mains supply 10....24 V DC
2. Output 0....10 V
3. Pressure connections
4. Voltage input for switch on Setpoint 1/Setpoint 2

13 Accessory overview

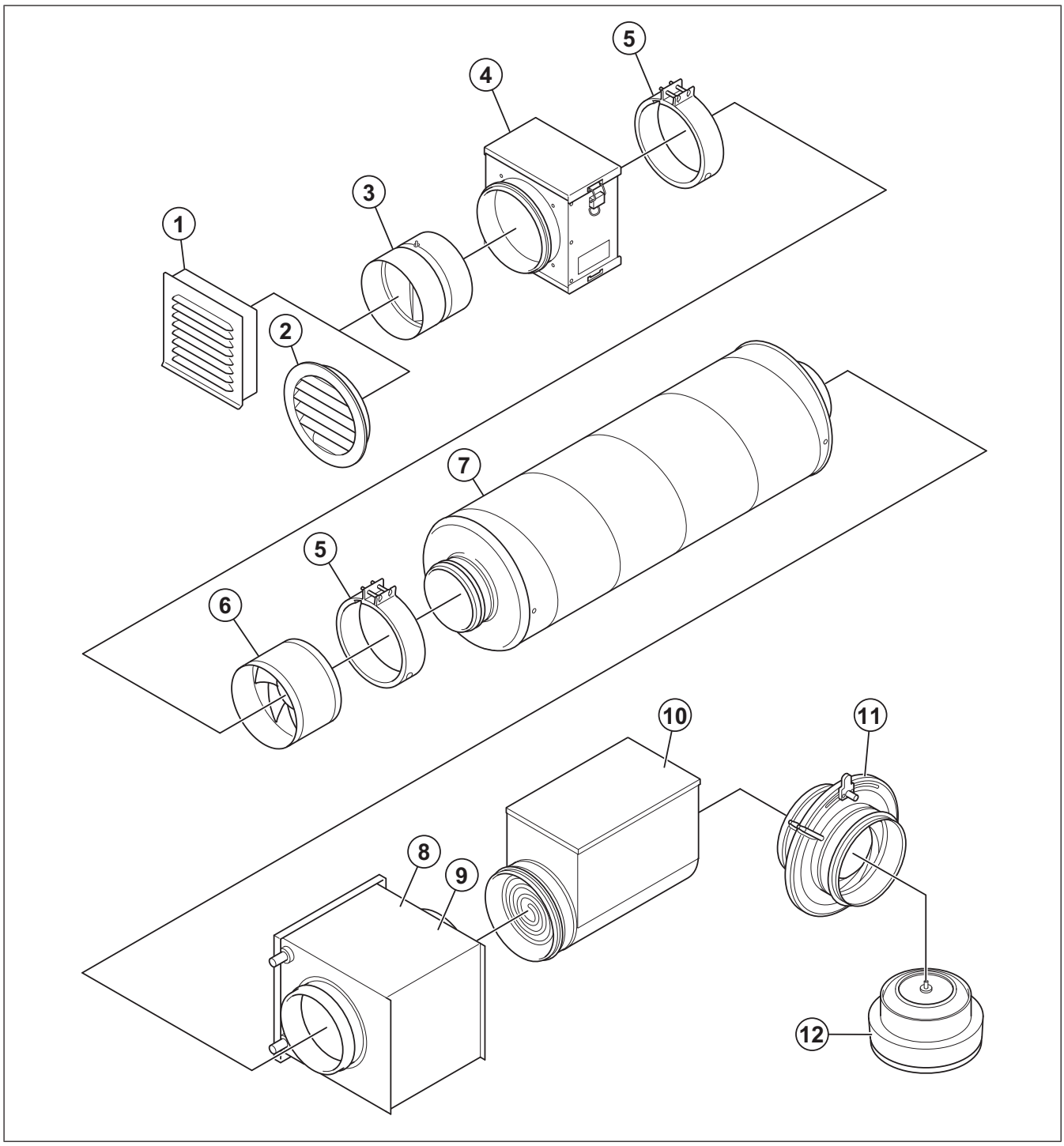

1. IGK: inlet louvre
2. IGC: inlet louvre
3. RSK: Back draft damper
4. FGR/FFR: Filter cassette
5. FK fast clamp
6. Fan
7. LDC: Silencer
8. CWK: Water cooling battery
9. VBC: Water heating battery
10. CB and CBM: Electrical duct heaters
11. SPI: Iris damper
12. Balance S supply air diffuser

Note:

The selection of accessories shown are not supplied with the product. For more information and other available accessories, refer to www.systemair.com or speak to Systemair technical support.

14 EU Declaration of Conformity

We, the manufacturer

Manufacturer	Systemair Production AB
Address	Industrivägen 3 739 30 Skinnskatteberg Sweden

declare under our sole responsibility that the products

Machine	Circular duct fan
Type/Model	K, KV, prio

fulfils the relevant provisions of following directives and standards

Machinery Directive 2006/42/EC

EN ISO 12100:2010

Safety of machinery – General principles for design - Risk assessment and risk reduction

EN ISO 13857:2019

Safety of machinery – Safety distances to prevent hazard zones being reached by upper or lower limbs

EN 60204-1:2018

Safety of machinery – Electrical equipment of machines – Part 1: General requirements

EN 60335-1:2012

Household and similar electrical appliances – Safety Part 1: General requirements.

EN 60 335-2-80:2003

Household and similar electrical appliances – Safety – Part 2-80: Particular requirements for fans.

EN 50106:2008

Safety of household and similar appliances – Particular rules for routine tests referring to appliances under the scope of EN 60 335-1.

EN 60529:2014

Degrees of protection provided by enclosures (IP Code).

Directive electromagnetic compatibility (EMC) 2014/30/EU

EN 62233:2008

Measurement methods for electromagnetic fields of household appliances and similar apparatus with regard to human exposure

EN 61000-6-2:2005

Electromagnetic compatibility (EMC) – Part 6-2: Generic standards – Immunity for industrial environments.

EN 61000-6-3:2007

Electromagnetic compatibility (EMC) – part 6-3: Generic standards – emission standard for residential, commercial and light-industrial environments.

RoHS Directive 2011/65/EU and amendment (EU) 2015/863

EN IEC 63000:2018

Technical documentation for the assessment of electrical and electronic products with respect to the restriction of hazardous substances

Ecodesign Directive 2009/125/EC

2024/1834 Requirements for fans between 125W and 500kW

327/2011 Requirements for fans above 125W

1253/2014 Requirements for ventilation units above 30W

1254/2014 Requirements for energy labelling of residential ventilation units

EN ISO 5801:2017

Fans – Performance testing using standardized airways.

EN 13142:2021

Ventilation for buildings – Components/Products for residential ventilation – required and optional performance characteristics.

Persons authorized to compile the technical file:

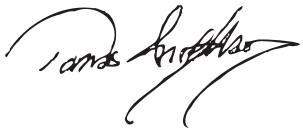

Tomas Angelhag

Head Of Engineering

This declaration relates exclusively to the machinery in the state in which it was placed on the market and excludes components which are added or operations carried out subsequently by the final user.

Skinnskatteberg, Sweden 2026-09-02

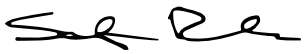

Sofia Rask

Managing Director

15 UK Declaration of Conformity

We, the manufacturer

Manufacturer	Systemair Production AB
Address	Industrivägen 3 SE-73930 Skinskatteberg Sweden

declare under our sole responsibility that the products

Machine	Circular duct fan
Type/Model	K, KV, prio

fulfils the relevant provisions of following directives and standards

Supply of Machinery (Safety) Regulations 2008

EN ISO 12100:2010

Safety of machinery – General principles for design - Risk assessment and risk reduction

EN ISO 13857:2019

Safety of machinery – Safety distances to prevent hazard zones being reached by upper or lower limbs

EN 60204-1:2018

Safety of machinery – Electrical equipment of machines – Part 1: General requirements

EN 60335-1:2012

Household and similar electrical appliances – Safety Part 1: General requirements.

EN 60 335-2-80:2003

Household and similar electrical appliances – Safety – Part 2-80: Particular requirements for fans.

EN 50106:2008

Safety of household and similar appliances – Particular rules for routine tests referring to appliances under the scope of EN 60 335-1.

EN 60529:2014

Degrees of protection provided by enclosures (IP Code).

Electromagnetic Compatibility Regulations 2016

EN 62233:2008

Measurement methods for electromagnetic fields of household appliances and similar apparatus with regard to human exposure

EN 61000-6-2:2005

Electromagnetic compatibility (EMC) – Part 6-2: Generic standards – Immunity for industrial environments.

EN 61000-6-3:2007

Electromagnetic compatibility (EMC) – part 6-3: Generic standards – emission standard for residential, commercial and light-industrial environments.

The Restriction of the Use of Certain Hazardous Substances in Electrical and Electronic Equipment Regulations 2012

EN IEC 63000:2018

Technical documentation for the assessment of electrical and electronic products with respect to the restriction of hazardous substances

The Ecodesign for Energy-Related Products and Energy Information (Amendment) (EU Exit) Regulations 2019

2024/1834 Requirements for fans between 125W and 500kW

327/2011 Requirements for fans above 125W

1253/2014 Requirements for ventilation units above 30W

1254/2014 Requirements for energy labelling of residential ventilation units

EN ISO 5801:2017

Fans – Performance testing using standardized airways.

EN 13142:2021

Ventilation for buildings – Components/Products for residential ventilation – required and optional performance characteristics.

Persons authorized to compile the technical file:

Tomas Angelhag

Head Of Engineering

This declaration relates exclusively to the machinery in the state in which it was placed on the market and excludes components which are added or operations carried out subsequently by the final user.

Skinnskatteberg, Sweden 2026-09-02

Sofia Rask

Managing Director

Systemair Production AB

Industrivägen 3

SE-739 30 Skinnskatteberg

+46 222 440 00

mailbox@systemair.com

www.systemair.com

© Copyright Systemair AB
All rights reserved
EOE

Systemair AB reserves the rights to alter their products without notice. This also applies to products already ordered, as long as it does not affect the previously agreed specifications.

Document in original language

2026-09-02

483717 - 004